MST

max speed technology

FXX-D S

1 / 10 DRIFT CHASSIS

INSTRUCTION MANUAL

ON ROAD USE ONLY
FULL BALL BEARINGS

WHEELBASE :	STANDARD 257mm (adjustable)
WIDTH :	STANDARD 190mm (adjustable)
GEAR RATIO :	2.12 (36T/17T)
CASTER :	8 degrees variableness
CAMBER :	0 to -12 degrees

www.rc-mst.com

※SPECIFICATION ARE SUBJECT TO CHANGE WITHOUT NOTICE

TOOLS & ACCESSORIES

Necessary tools and accessories for [FXX-D S] assembly
FXX-D S 需求工具及配件

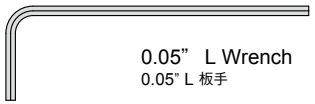

0.05” L Wrench
0.05” L 板手

1.27 Hex

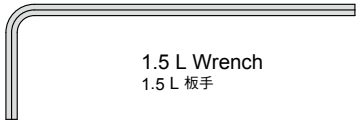

1.5 L Wrench
1.5 L 板手

1.5 Hex

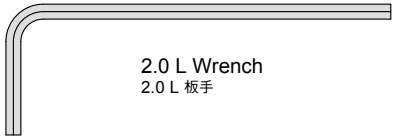

2.0 L Wrench
2.0 L 板手

2.0 Hex

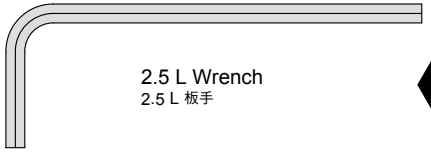

2.5 L Wrench
2.5 L 板手

2.5 Hex

5.5 & 7.0 Alum. wrench
5.5 & 7.0 套筒板手

5.5 7.0

3×35 Pin
3×35 插銷

M3×3 screw ×2
M3×3 止付螺絲

Antenna pipe
天線管

R-clip ×5
R形扣

20×80 EVA double sided tape
EVA 雙面膠

20×80 Sponge
吸震泡棉

Inner sponge
吸震泡棉

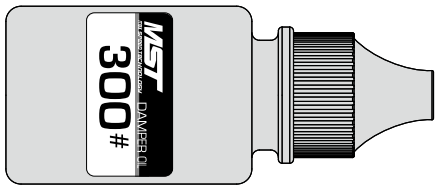

OIL
Damper oil #300
避震矽油 #300

Black Grease
Black grease
黑油

NECESSARY TOOLS FOR ASSEMBLY 工具需求
〔NOT INCLUDED IN KIT〕［另購］

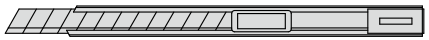

Hobby knife
美工刀

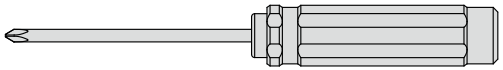

Screwdriver
螺絲起子

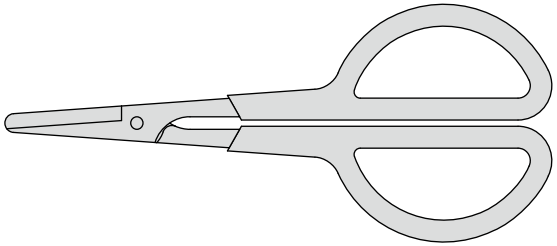

Scissors
剪刀

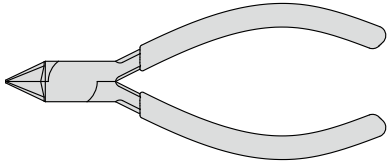

Side cutter
斜口鉗

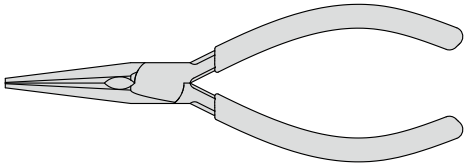

Needle nose pliers
尖嘴鉗

210272
Turnbucle wrench
拉桿板手

Please follow the assembling figures and instructions closely for your [XXX-D VIP HT] best performance!
請依照說明書圖示步驟安裝以發揮 [XXX-D VIP HT] 最好效能！

20×80 sponge ×1
泡棉

Battery guard ×1
電池擋板

Side opening guard mount ×1
側開式擋板座

Side opening guard cover ×1
側開式擋板蓋

L Battery guard ×1
L型電池擋板

Side opening ESC plate ×1
側開式電變托盤

M3×8 screw ×8
沉頭螺絲

M3×10 screw ×1
沉頭螺絲

M3×5 screw ×1
十字扁頭螺絲

M3×14 screw ×1
圓頭螺絲

Side opening guard knob ×1
側開式擋板門把

P3 O-ring (black) ×1
O環（黑）

Suspension mount (-0.5) ×1
下擺臂座（-0.5）

Suspension mount (+0.5) ×1
下擺臂座（+0.5）

OPTIONAL PARTS

820036
Alum. suspension mount (-0.5)
鋁合金下擺臂座（-0.5）

820037
Alum. suspension mount (+0.5)
鋁合金下擺臂座（+0.5）

※ 210321 suspension balls 2.5×5 is required for Alum. suspension mount installing.
以上搭配（210321）插銷球頭才可使用。

STEP 1 Attaching sponge
安裝泡棉

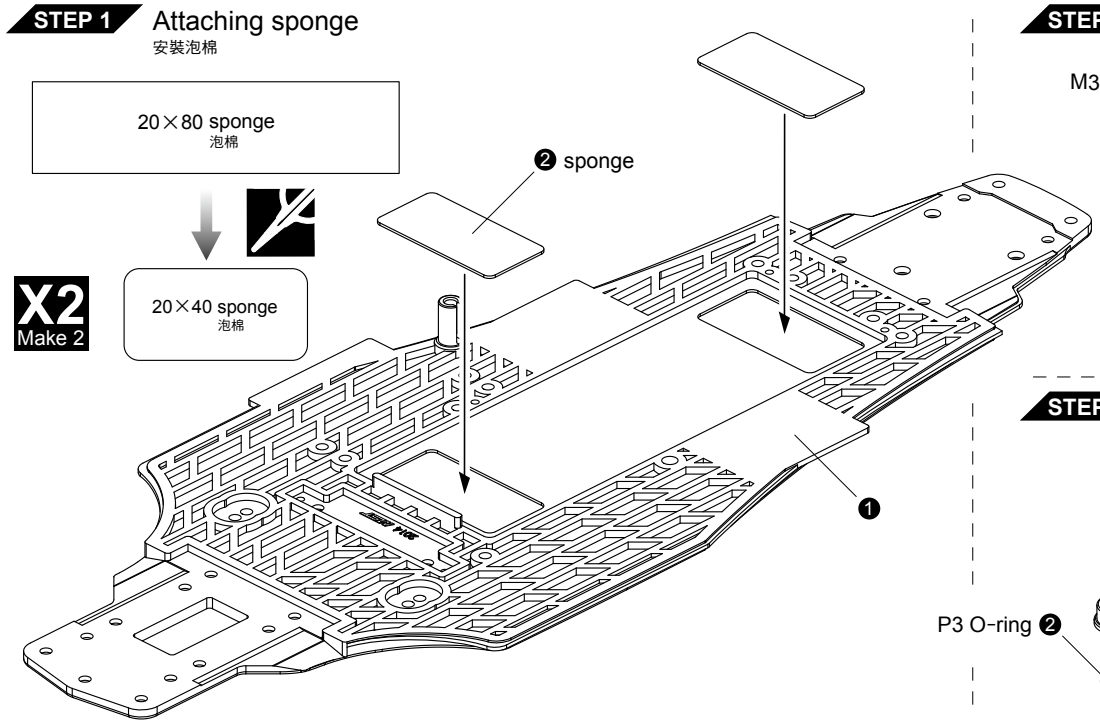

STEP 2 Battery guard assembly
電池擋板組裝

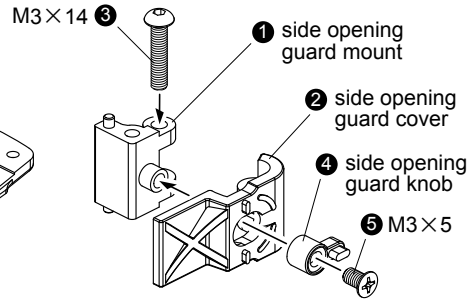

STEP 3 ESC plate assembly
電變托盤組裝

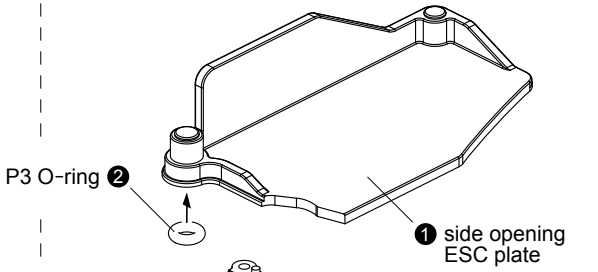

STEP 4 Front & rear suspension mount assembly
前後下擺臂座組裝

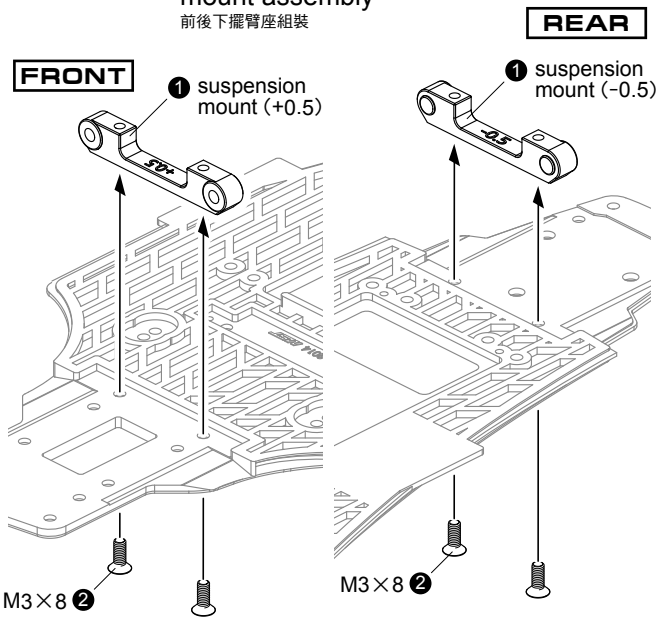

STEP 4 Attaching battery guard
安裝電池擋板

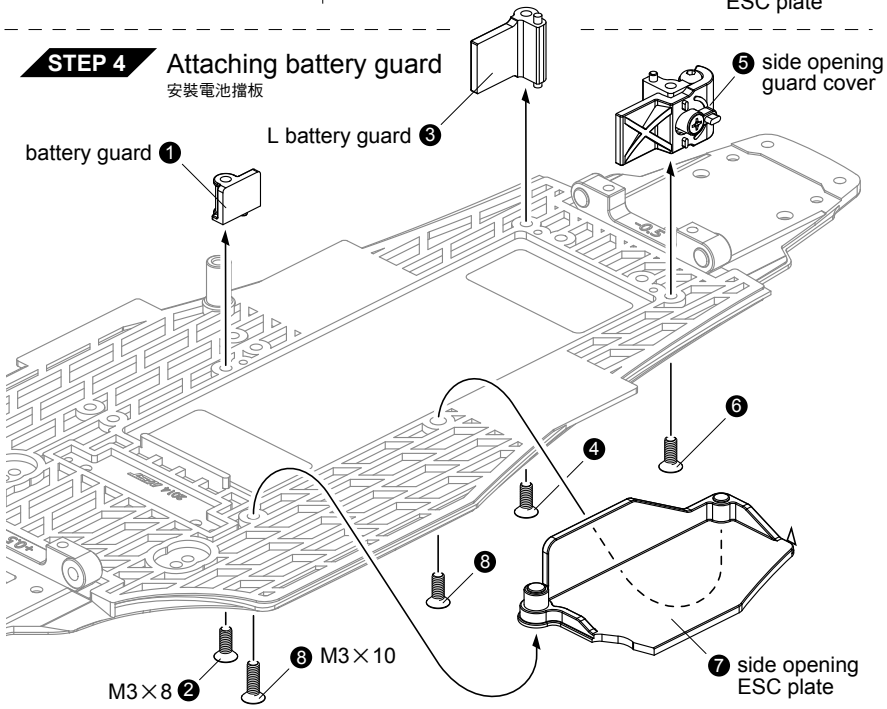

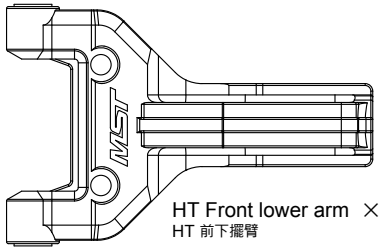

HT Front lower arm ×2
HT 前下擺臂

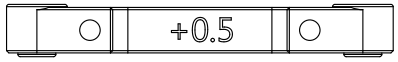

Suspension mount (+0.5) ×1
下擺臂座 (+0.5)

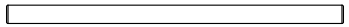

2.5×46 arm shaft ×2
擺臂插銷

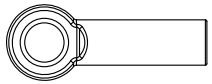

5.8×26 Adjuster ×2
拉桿頭

2.5×1 shaft bush ×2
軸心轉接套

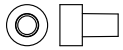

2.5×3 shaft bush ×2
軸心轉接套

3×5.8×1 spacer ×2
墊片

3×5.5×2 spacer ×2
墊片

4.8 Copper hex ball ×2
銅製外六角球頭

5.8 ball connector ×2
球頭

M3×8 screw ×2
沉頭螺絲

M3×10 screw ×2
圓頭螺絲

M3×12 screw ×2
圓頭螺絲

OPTIONAL PARTS

820037
Alum. suspension mount (+0.5)
鋁合金下擺臂座 (+0.5)

※210321 suspension balls 2.5×5 is required for Alum. suspension mount installing.
以上搭配 (210321) 插銷球頭才可使用。

STEP 1 Front lower arm assembly
前下擺臂組裝

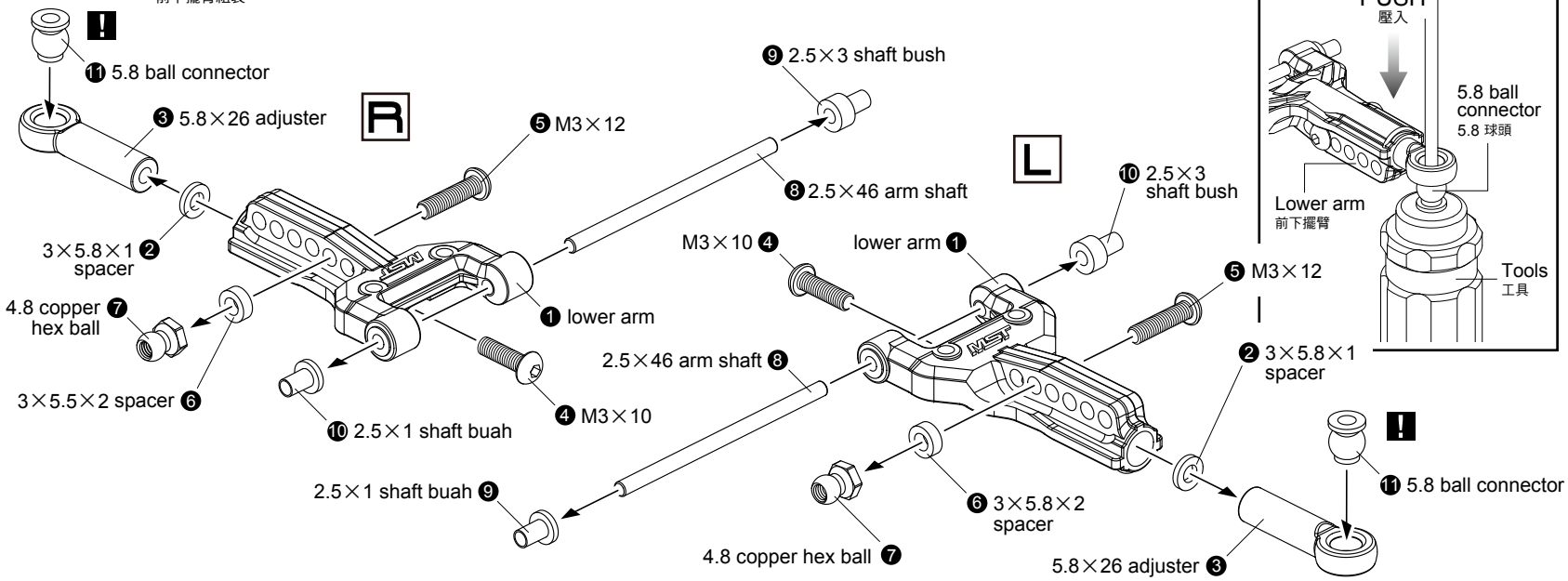

STEP 2 Attaching front lower arms
安裝前下擺臂

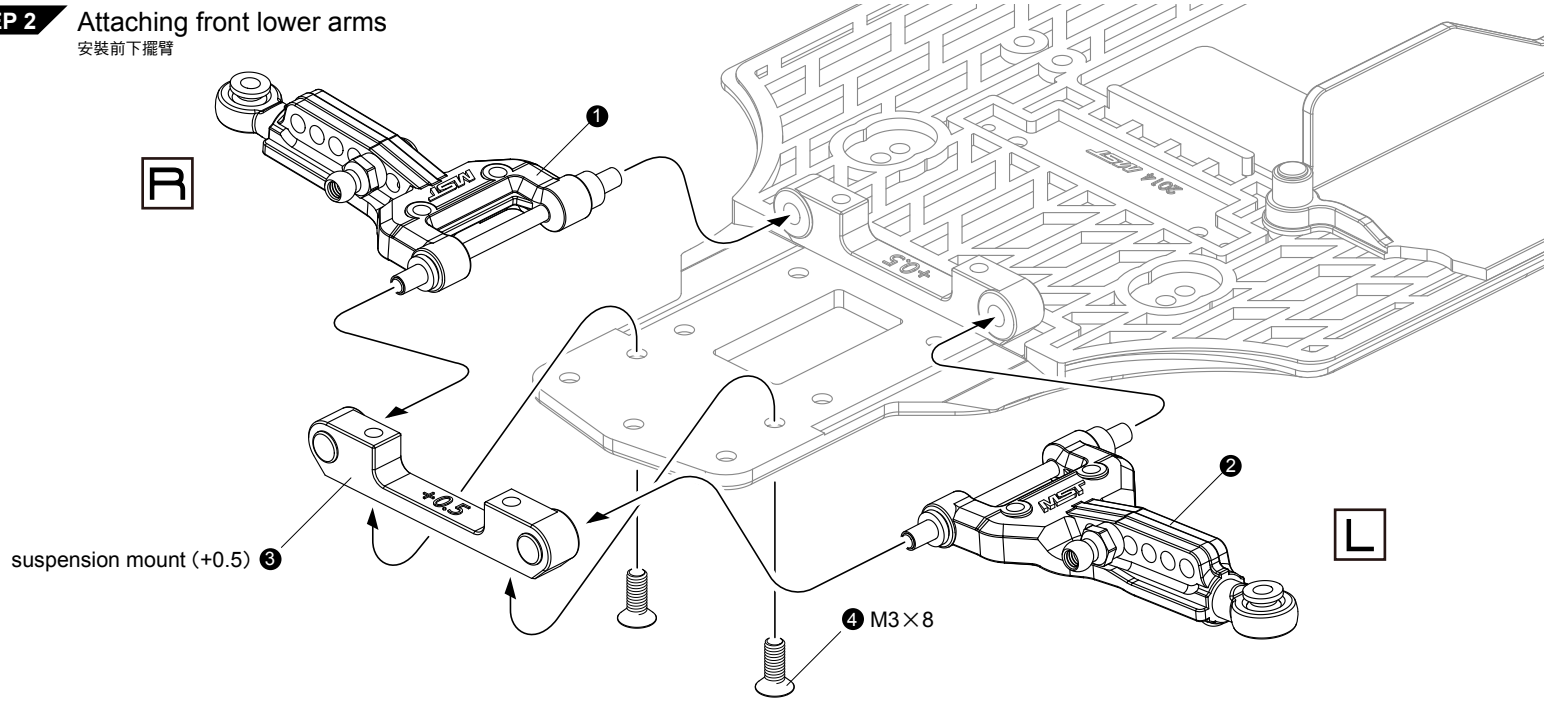

Steering joint plate ×1
轉向連接板

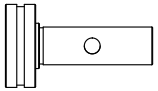

Steering arm post ×2
轉向搖臂支柱

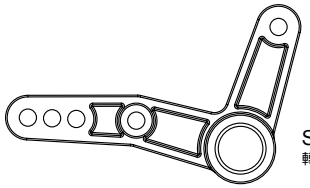

Steering arm A ×1
轉向搖臂A

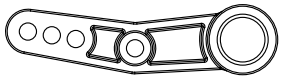

Steering arm B ×1
轉向搖臂B

Steering adjuster ×2
轉向拉桿

M3×6 screw ×2
圓頭螺絲

M3×14 screw ×1
圓頭螺絲

M3×7 screw ×2
十字扁頭螺絲

M3×6 screw ×2
圓頭螺絲(半牙)

4.8 ball connector L ×1
外六角球頭 (長)

4.8×4.5 copper ball connector ×2
銅製球頭螺絲

3×5.8×3 spacer ×1
墊片

5×8×2.5 spacer ×4
墊片

OPTIONAL PARTS

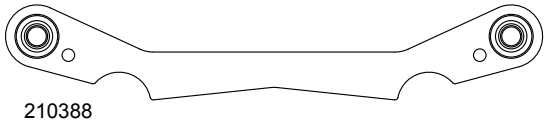

210388
FXX Carbon steering joint plate 2.5
FXX 碳纖維轉向連接板 2.5

STEP 1 Attaching steering arm post
安裝轉向搖臂支柱

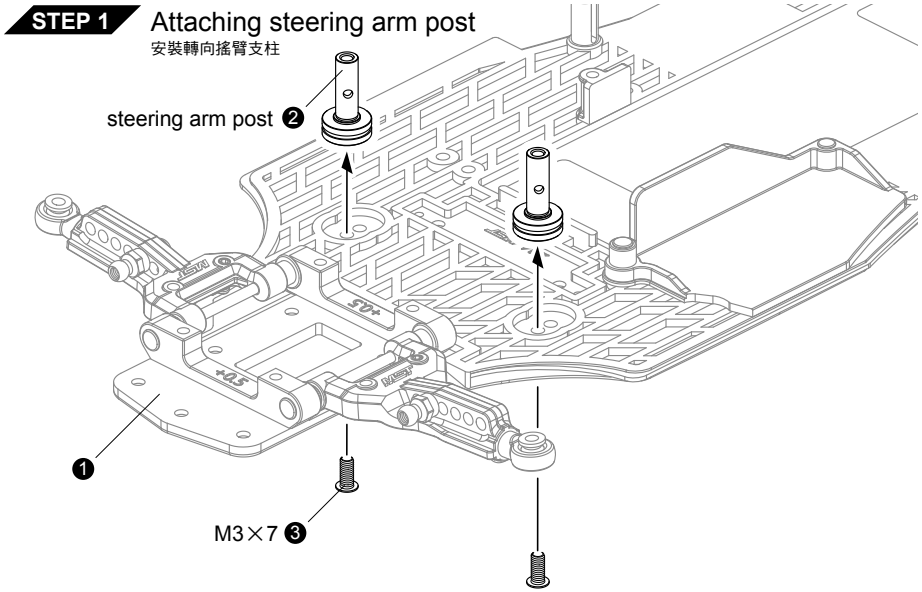

STEP 2 Attaching steering joint plate
組裝轉向連接板

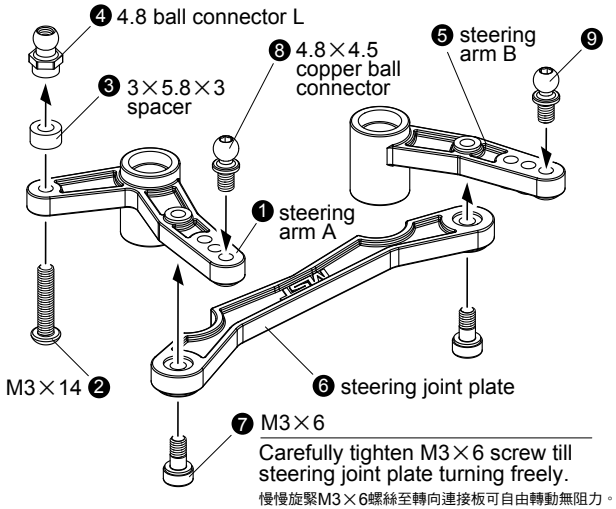

Carefully tighten M3×6 screw till steering joint plate turning freely.
慢慢旋緊M3×6螺絲至轉向連接板可自由轉動無阻力。

STEP 3 Attaching steering arm
安裝轉向搖臂組

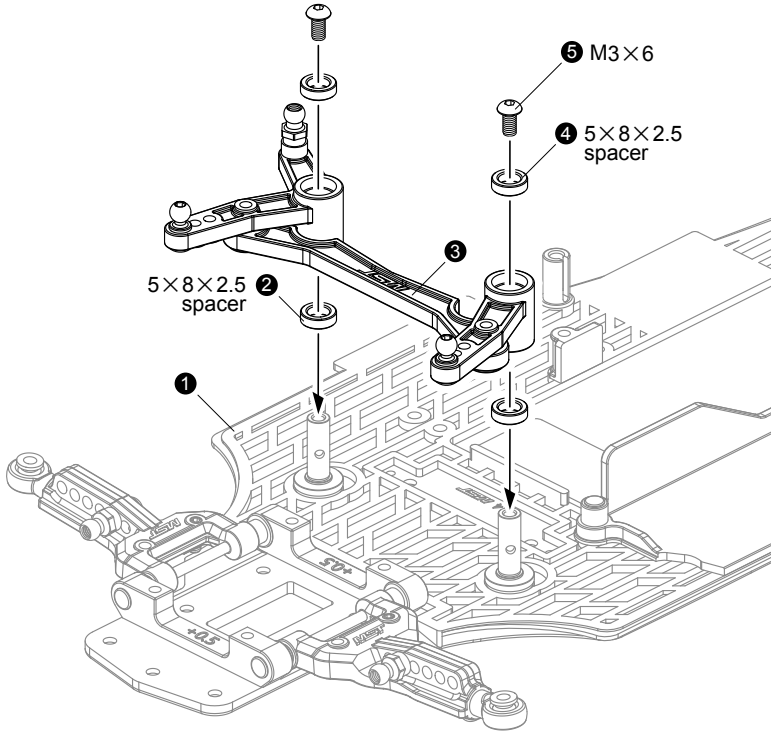

STEP 2 Attaching steering adjuster
安裝轉向拉桿

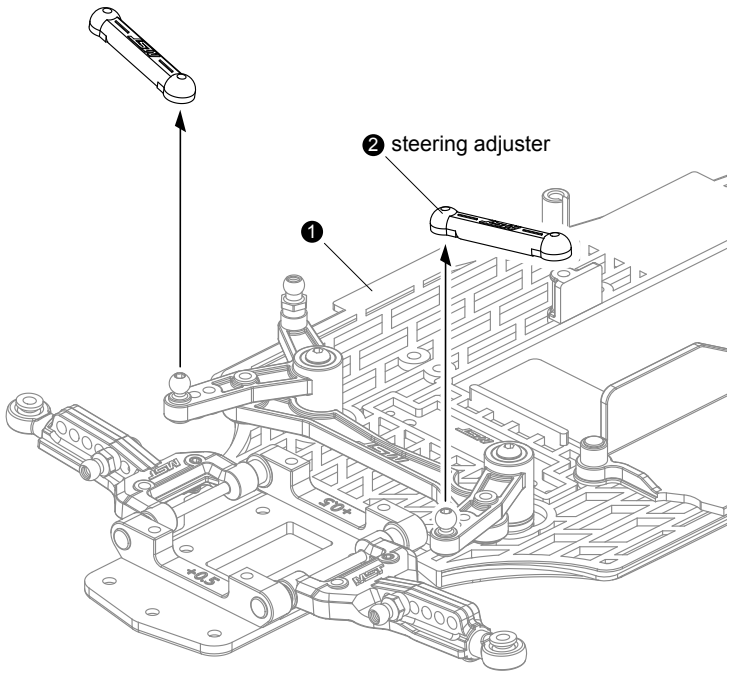

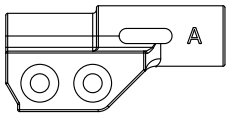

Front upper arm A ×1
前上擺臂A

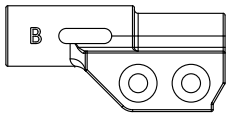

Front upper arm B ×1
前上擺臂B

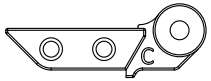

Front upper arm C ×1
前上擺臂C

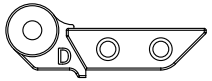

Front upper arm D ×1
前上擺臂D

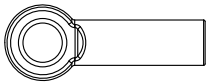

5.8×26 Adjuster ×2
拉桿頭

M2.5×6 screw ×4
圓頭螺絲

M3×25 screw ×2
圓頭螺絲

5.8 ball connector ×2
球頭

3×5.8×4 spacer ×2
墊片

ADDITIONAL PURCHASE

Caster block E
上擺臂墊片E

Caster block F
上擺臂墊片F

210061
HT Upper arm spacer
HT上擺臂墊片組

STEP 1 Front upper arm assembly
前上擺臂組裝

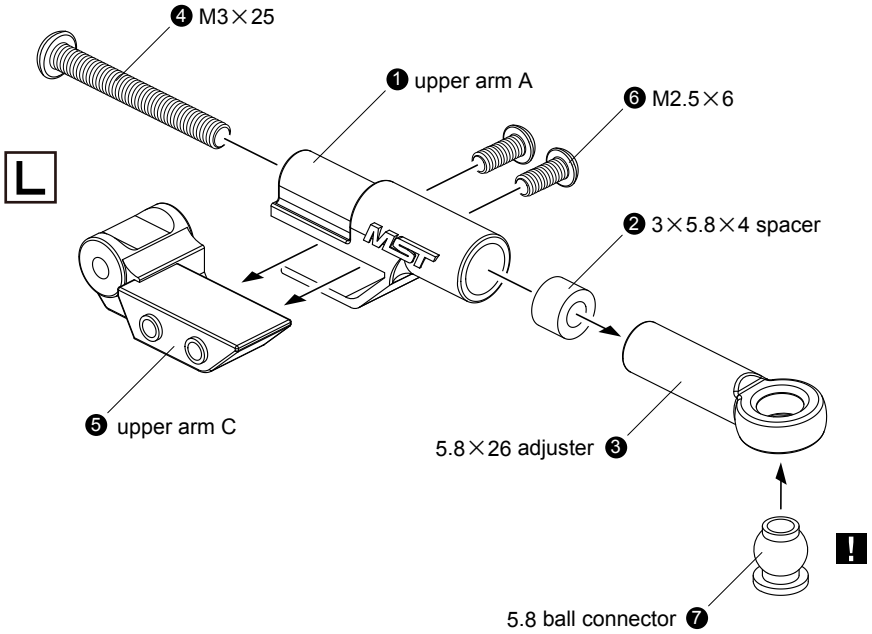

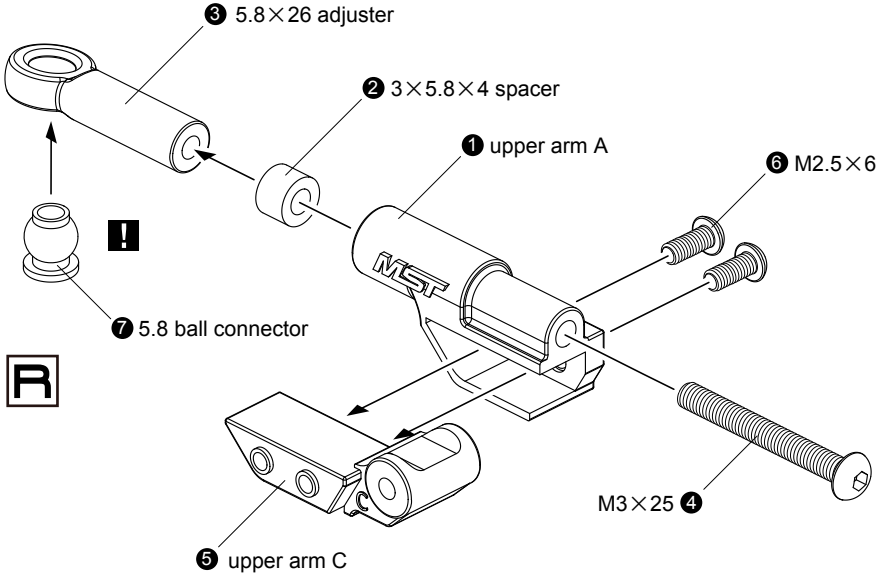

CASTER SETTING

A, C, E, are available for swapping using.
Please refer to below instructions.
Below diagrams are for right arm installation.

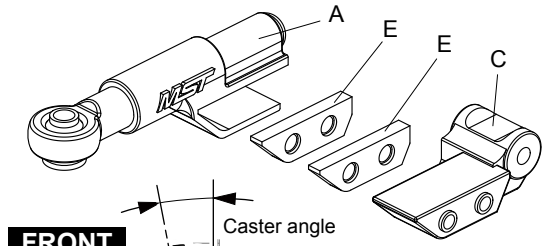

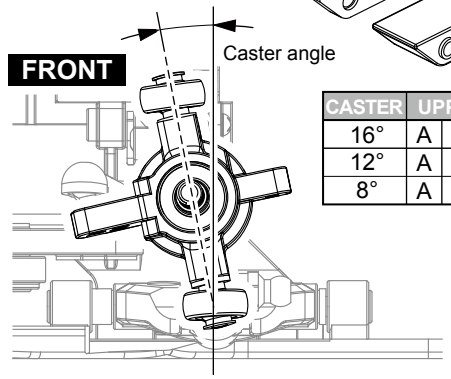

CASTER	UPPER ARM			
16°	A	E	E	C
12°	A	E		C
8°	A			C

Please change screw M2.5×6 to M2.5×10 for caster 12°/16°.

! ASSEMBLY TIPS
組裝小技巧

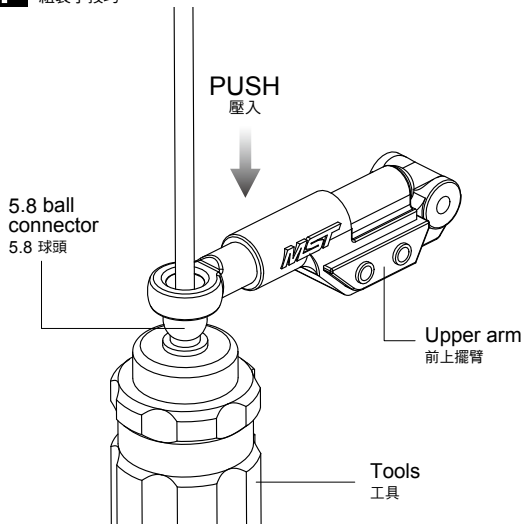

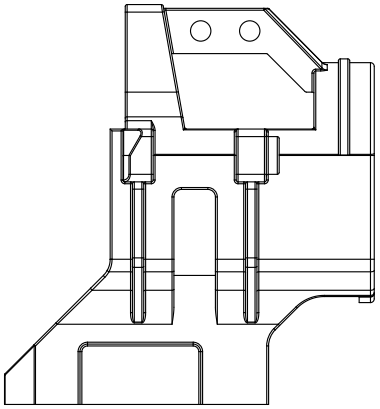

Motor mount ×1
馬達座

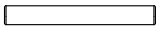

2.5×20 arm shaft ×2
擺臂插銷

M3×6 screw ×2
圓頭螺絲

3×7 screw ×4
自攻沉頭螺絲

M2×3 screw ×4
十字螺絲

OPTIONAL PARTS

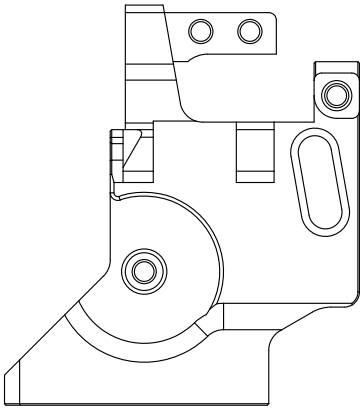

210340
FXX Alum. motor mount set
FXX 鋁合金馬達座組

STEP 1 Attaching motor
安裝馬達

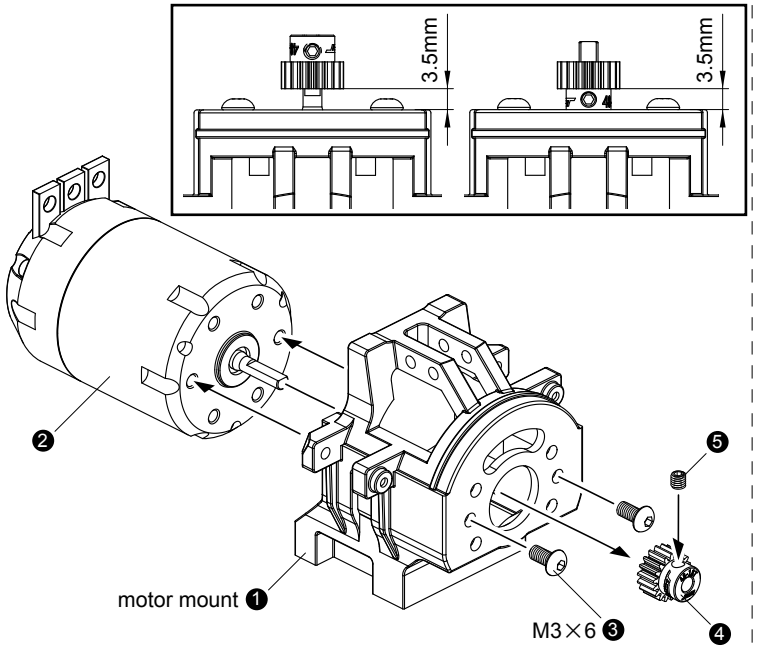

STEP 2 Attaching motor mount
安裝馬達座

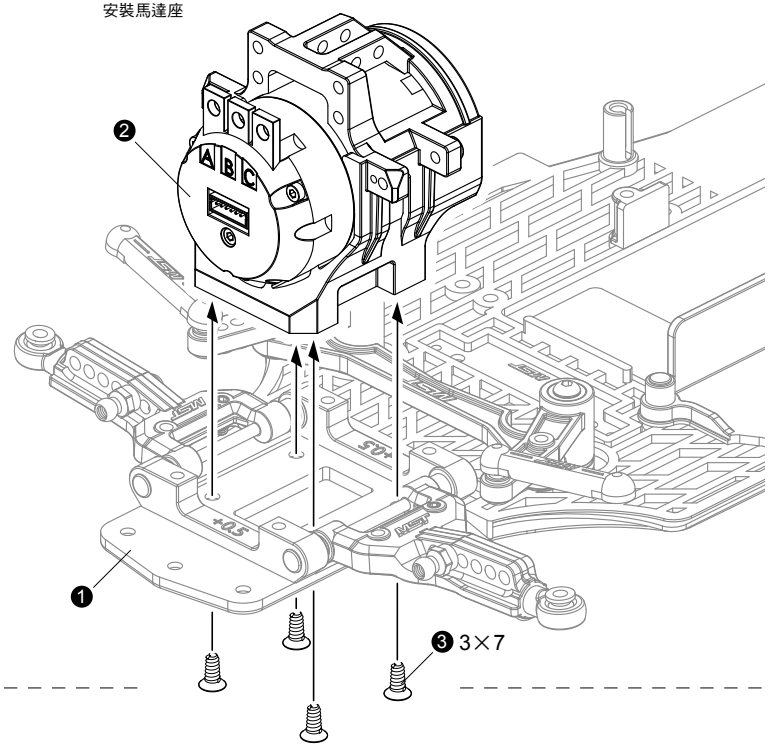

STEP 3 Attaching front upper arm
安裝前上擺臂

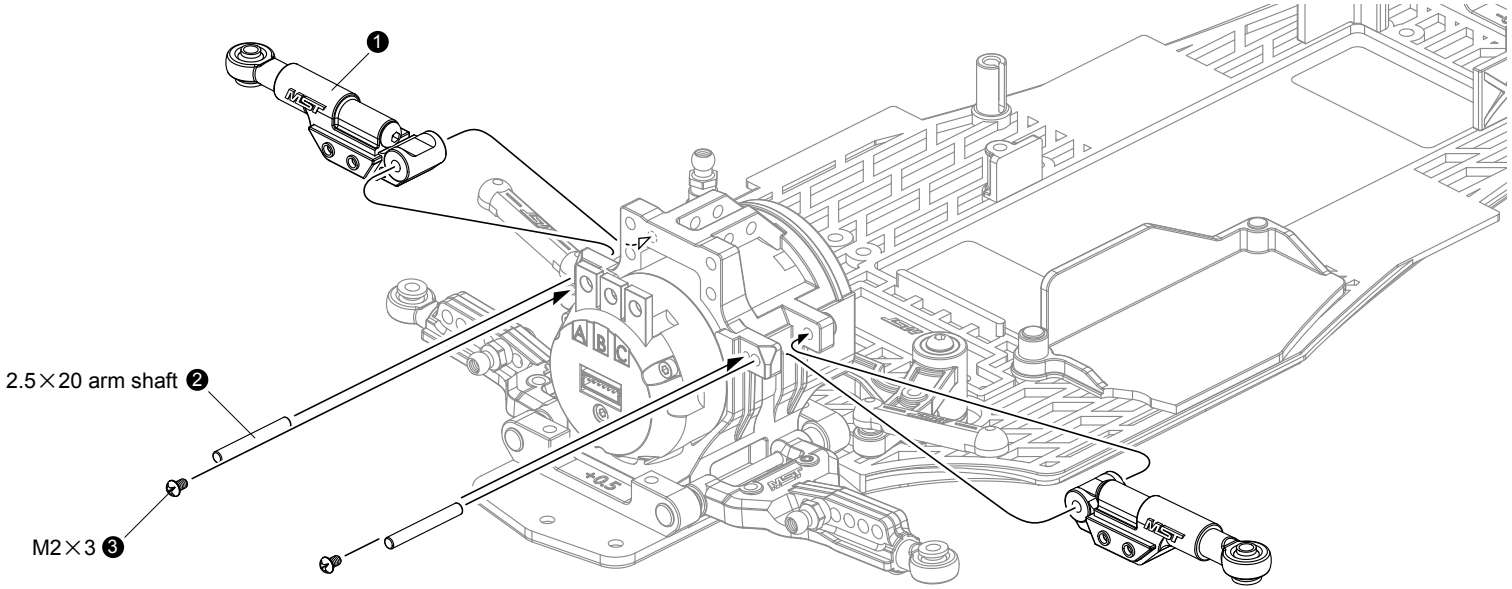

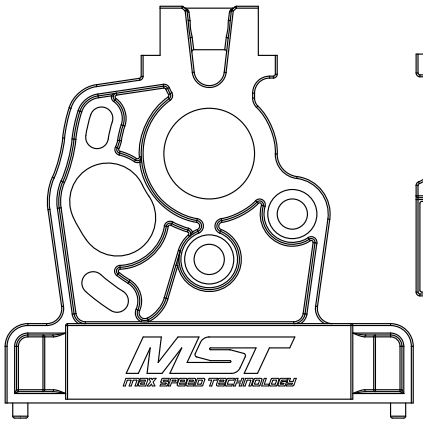

Reducer mount ×1
減速箱座

Reducer holder ×1
減速箱架

Gear ration adjuster ×1
齒比調整架

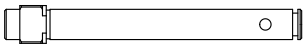

Drive gear shaft ×1
驅動齒軸

Gear C shaft ×1
終齒軸

Gear B 20T ×1
齒輪 B 20T

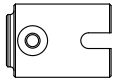

Propeller shaft joint ×1
中軸接杯

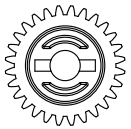

Gear A 28T ×1
齒輪 A 28T

1.5×7.8 shaft ×1
插銷

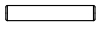

2×11.8 shaft ×1
插銷

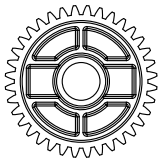

Gear C 36T ×1
齒輪 C 36T

3×6×0.5 spacer ×3
墊片

4×6×0.1 spacer ×1
墊片

4×6×0.3 spacer ×1
墊片

M2×6 screw ×1
圓頭螺絲

E-Clip 3.0 ×1
E扣 3.0

M3×6 screw ×1
圓頭螺絲

4×8 ball bearing ×2
培林

M3×8 screw ×4
圓頭螺絲

M2×8 screw ×1
圓頭螺絲（半牙）

5×10 ball bearing ×2
培林

M3×8 screw ×2
圓頭螺絲

STEP 1 Gear ration adjuster assembly
齒比調整架組裝

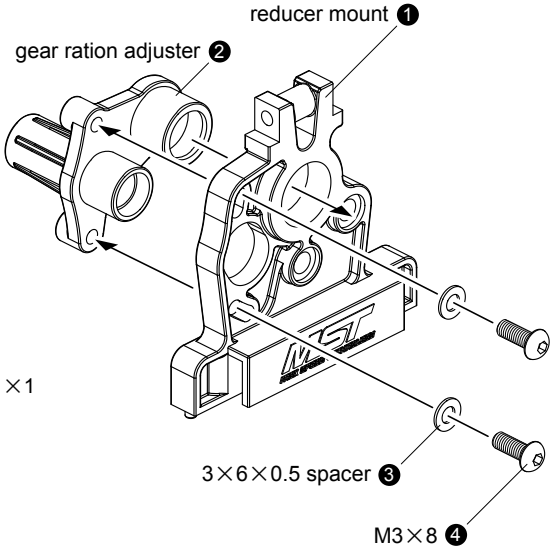

STEP 2 Drive gear assembly
驅動齒組裝

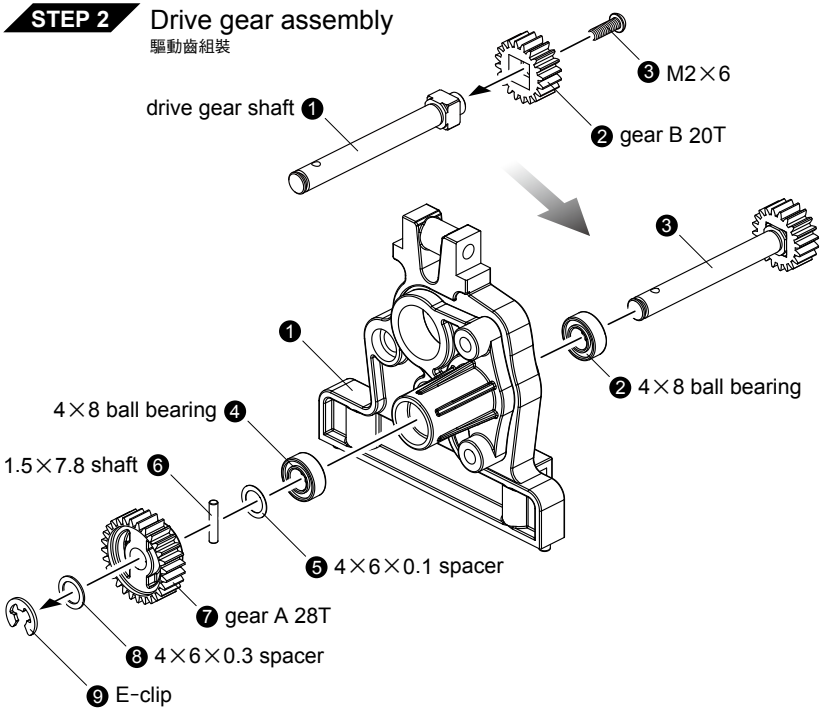

STEP 3 Reducer holder assembly
減速箱架組裝

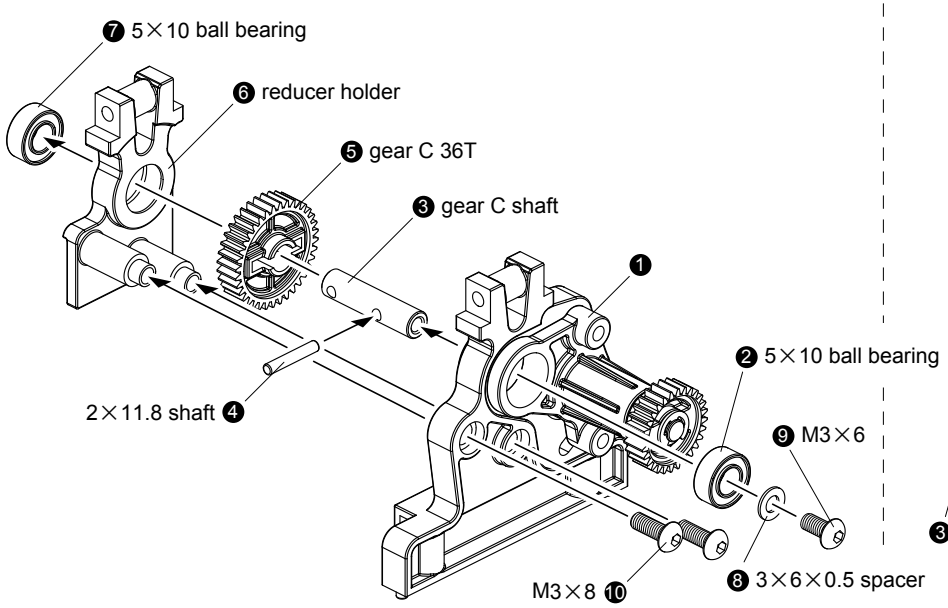

STEP 4 Propeller shaft joint assembly
中軸接杯組裝

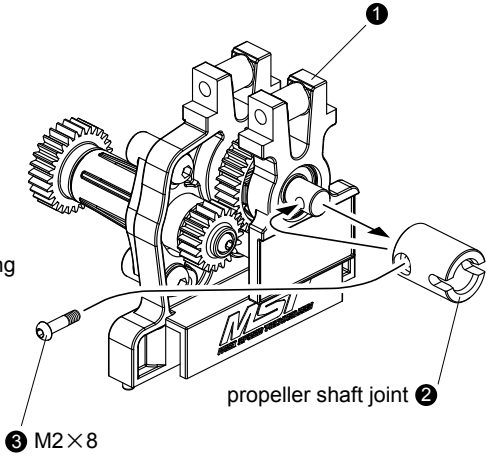

STEP 5 Attaching reducer
安裝減速箱

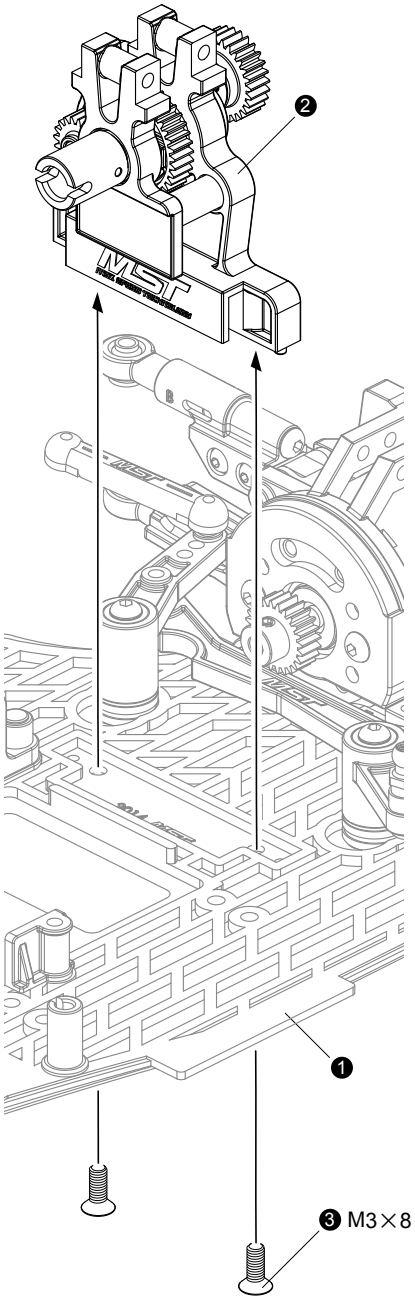

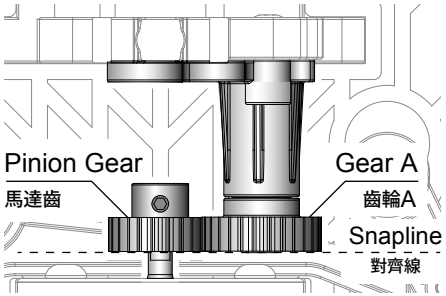

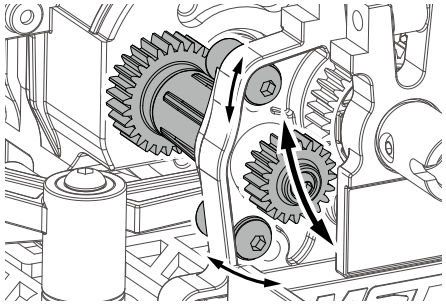

＊Loose both screws to adjust gear space.
調整齒輪間隙時，將上圖2螺絲鬆開後即可上下調整！

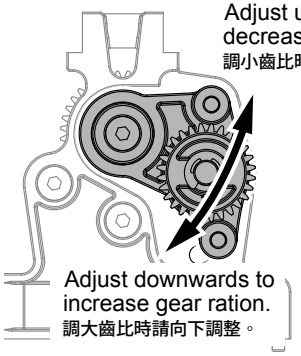

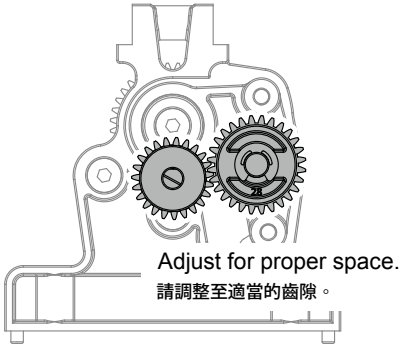

PARTS BAG 7

REAR LOWER ARM
後下擺臂

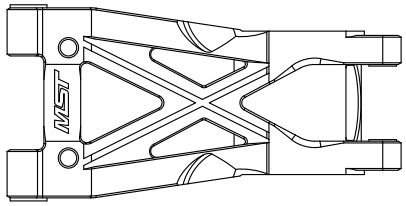

HT rear lower arm ×2
HT 後下擺臂

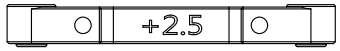

Suspension mount (+2.5) ×1
下擺臂座 (+2.5)

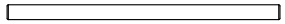

2.5×46 arm shaft ×2
擺臂插銷

4.8 copper hex ball ×2
4.8 銅製外六角球頭

2.5×1 shaft bush ×2
軸心轉接套

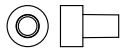

2.5×3 shaft bush ×2
軸心轉接套

M3×8 screw ×2
沉頭螺絲

M3×10 screw ×2
止付螺絲

OPTIONAL PARTS

820039
Alum. suspension mount (+2.5)
鋁合金下擺臂座 (+2.5)

※210321 suspension balls 2.5×5 is required for Alum. suspension mount installing.
以上搭配 (210321) 插銷球頭才可使用。

STEP 1 Rear lower arm assembly
後下擺臂組裝

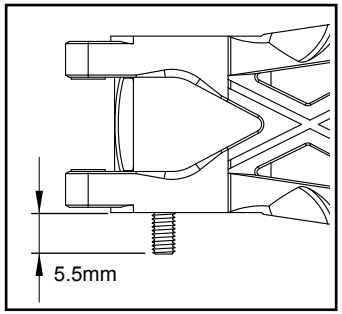

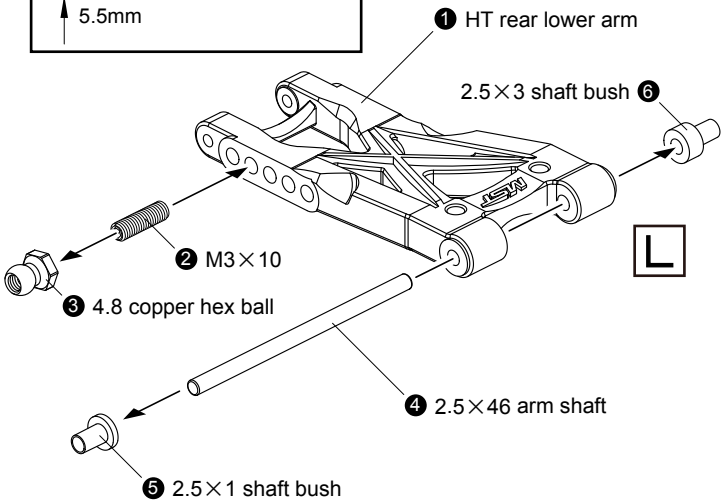

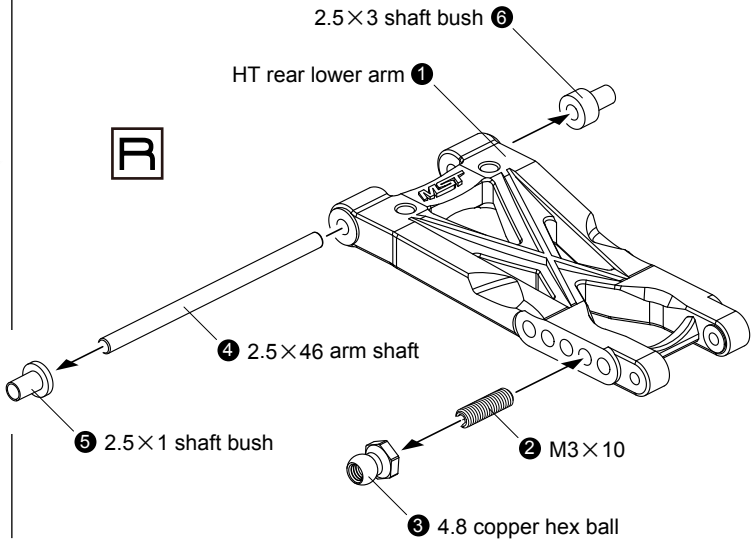

STEP 1 Attaching rear lower arm
安裝後下擺臂

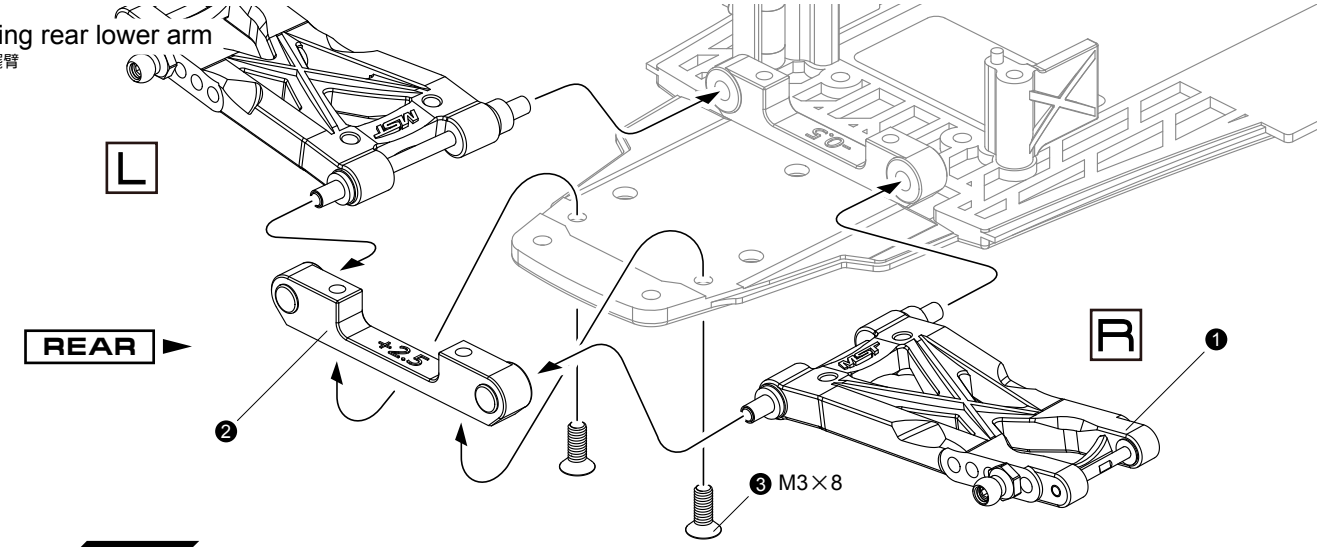

REAR TOE ANGLE SETTING

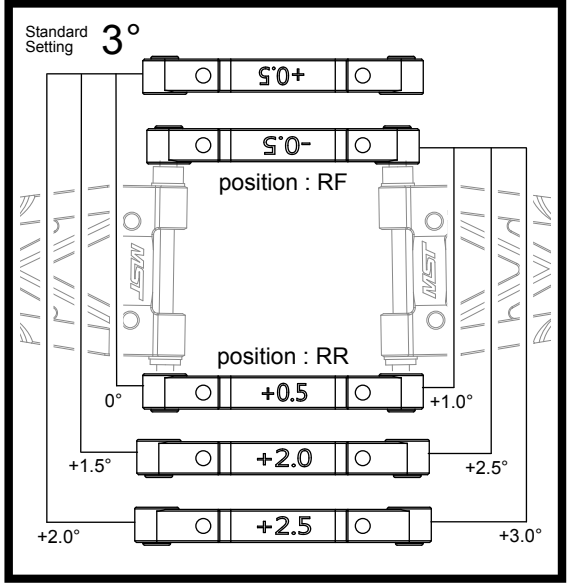

PARTS BAG 8 ◄ REAR SOLID AXLE (SPOOL)
後直軸

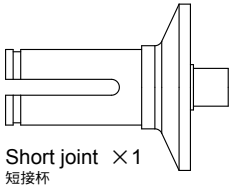
Short joint ×1
短接杯

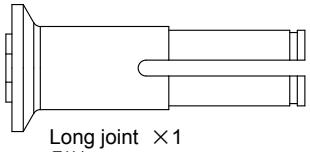
Long joint ×1
長接杯

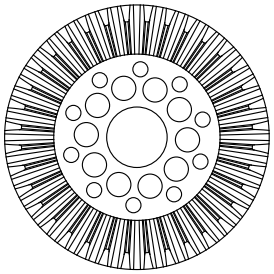
Bevel gear 36T ×1
傘齒 36T


5×8×4 bush ×1
襯套

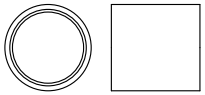
Joint ring ×2
接杯環

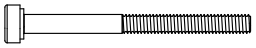
M2.5×30 screw ×1
有頭螺絲 (半牙)


3×6×0.5 spacer ×1
墊片

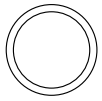
10×12×0.3 spacer ×1
墊片

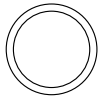
10×12×0.1 spacer ×1
墊片

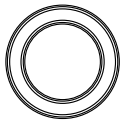
10×15 ball bearing ×2
培林

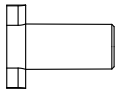
Solid axle nut ×1
直軸固定座

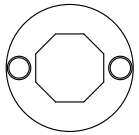
Solid axle plate ×2
滾差直軸連接耦

STEP 1 Rear solid axle (spool) assembly
後直軸組裝

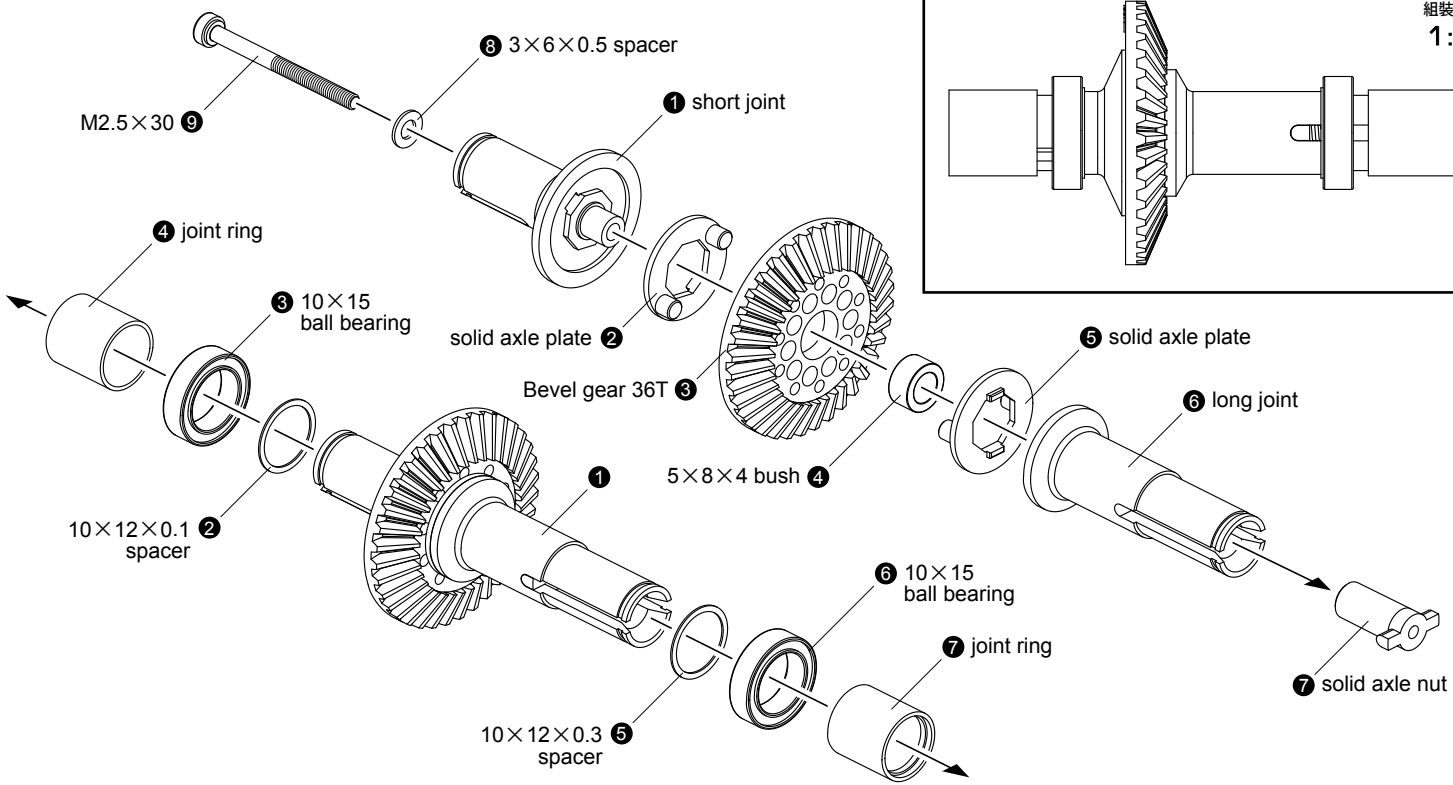

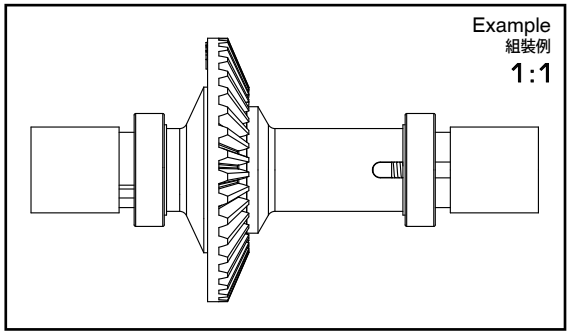

PARTS BAG 9 ◄ REAR DRIVEN SHAFT SET
雙節後軸組

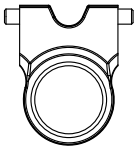

Bearing holder ×1
二樓板培林架

6×10×3
Ball bearing ×1
培林

2×9.8 Shaft ×1
插銷（剖槽）

M3×3 Screw ×1
止付螺絲

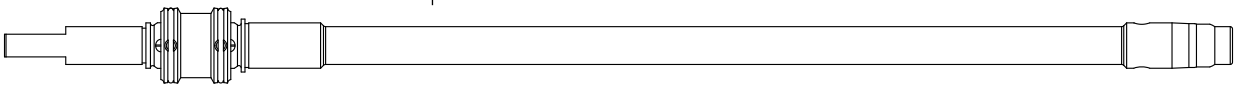

FXX Alum. rear driven shaft set ×1
FXX 鋁合金雙節後軸組

STEP 1 Rear driven shaft set assembly
雙節後軸組組裝

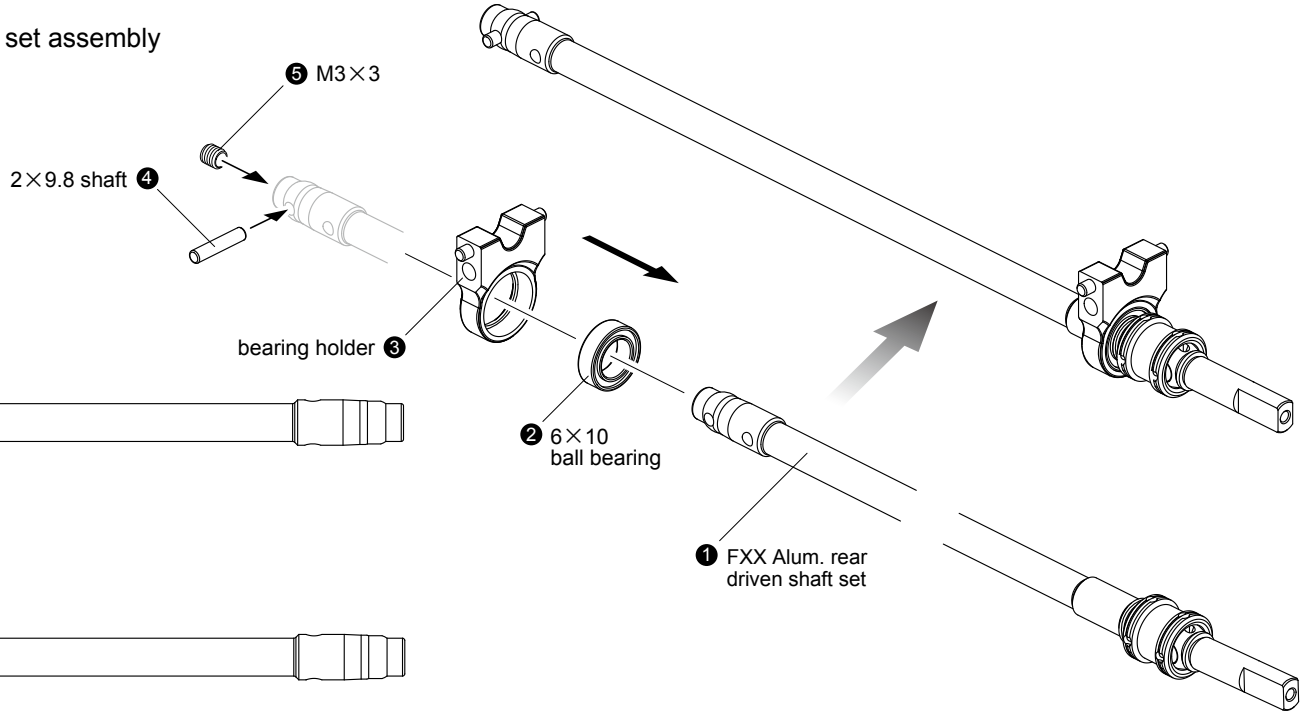

OPTIONAL PARTS

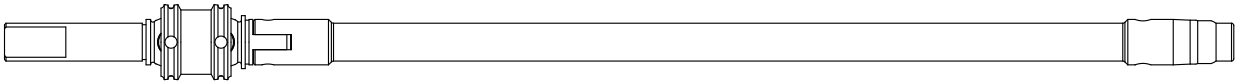

210365
FXX Reinforced propeller shaft set
FXX 強化雙節後軸組

PARTS BAG 10 ◄ REAR GEAR BOX
後齒箱

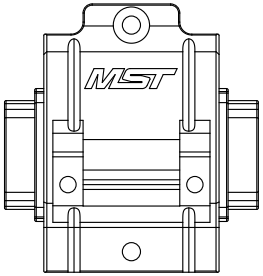

Rear gear box cover ×1
後齒箱蓋

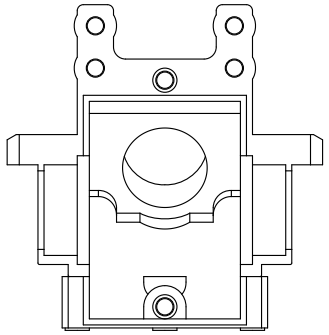

Rear gear box mount ×1
後齒箱座

STEP 1 Attaching rear driven shaft set
安裝雙節後軸組

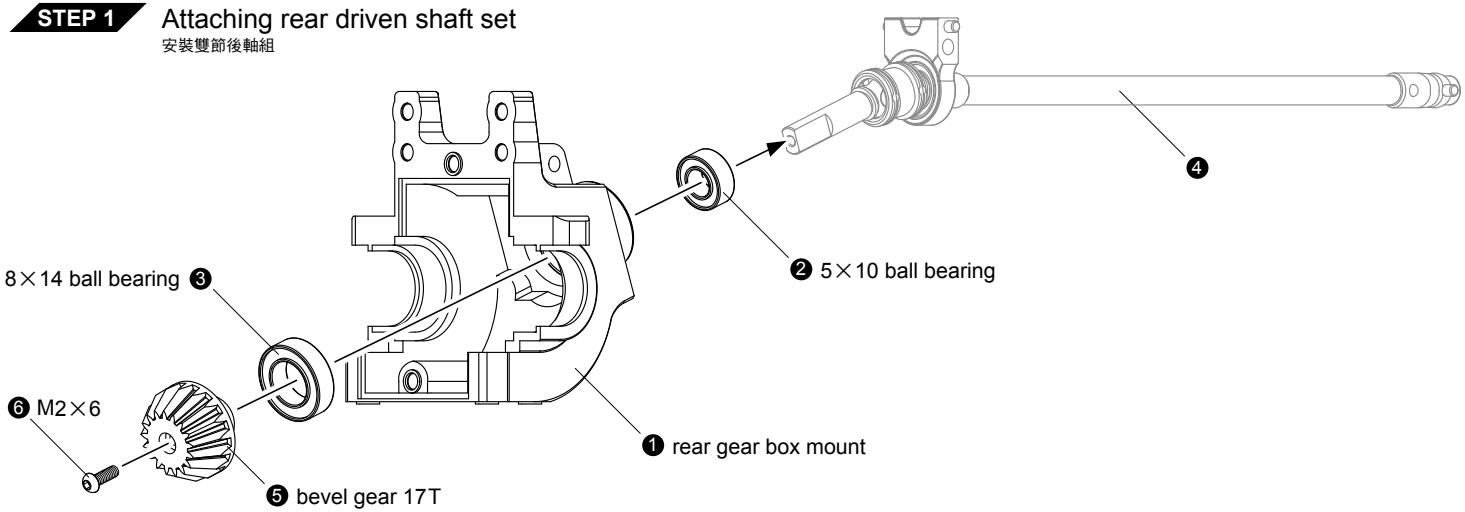

Rear upper turnbuckle ×2
後上拉桿

M2×6 screw ×1
圓頭螺絲

M3×8 screw ×2
圓頭螺絲

M3×8 screw ×3
沉頭螺絲

4.8×4.5 copper ball connector ×2
銅製球頭螺絲

5×10 ball bearing ×1
培林

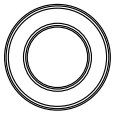

8×14 ball bearing ×1
培林

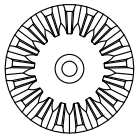

Bevel gear 17T ×1
傘齒 17T

OPTIONAL PARTS

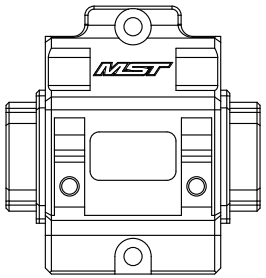

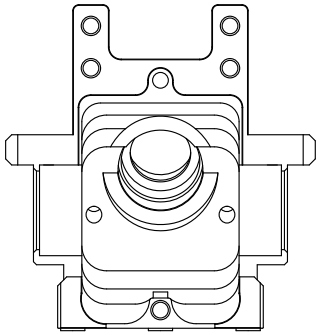

210384
FXX Alum. rear gear box
FXX 鋁合金後齒箱

STEP 2 Rear solid axle (spool) assembly
後直軸組裝

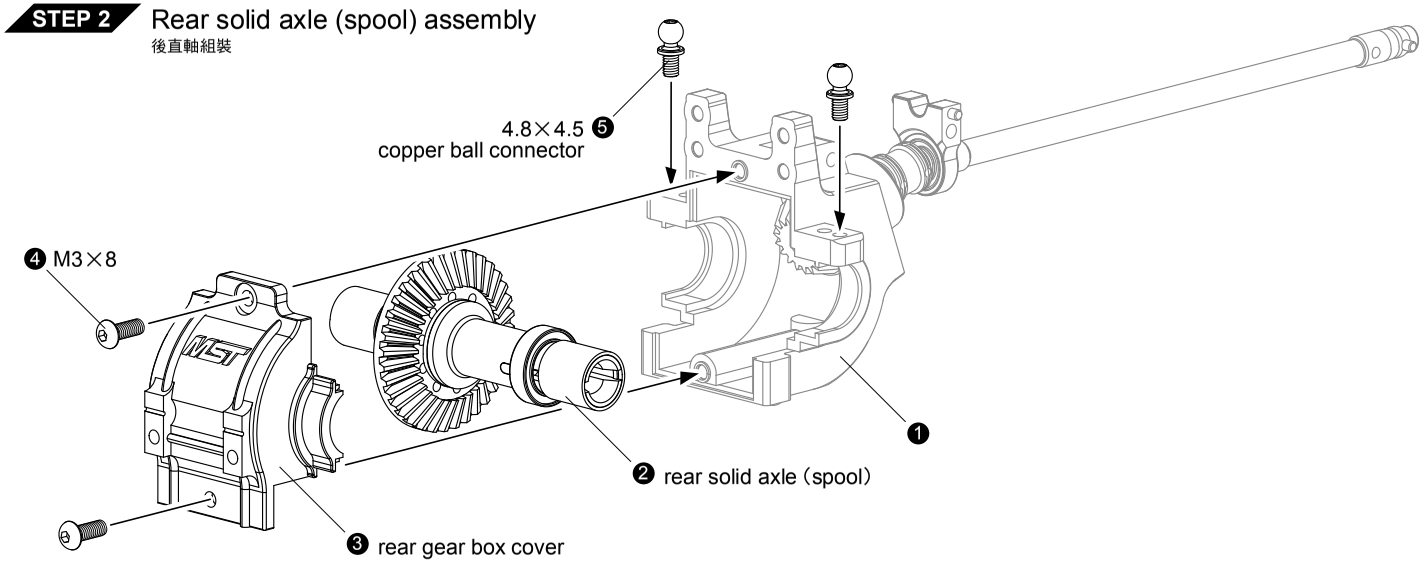

STEP 3 Attaching rear gear box
安裝後齒箱

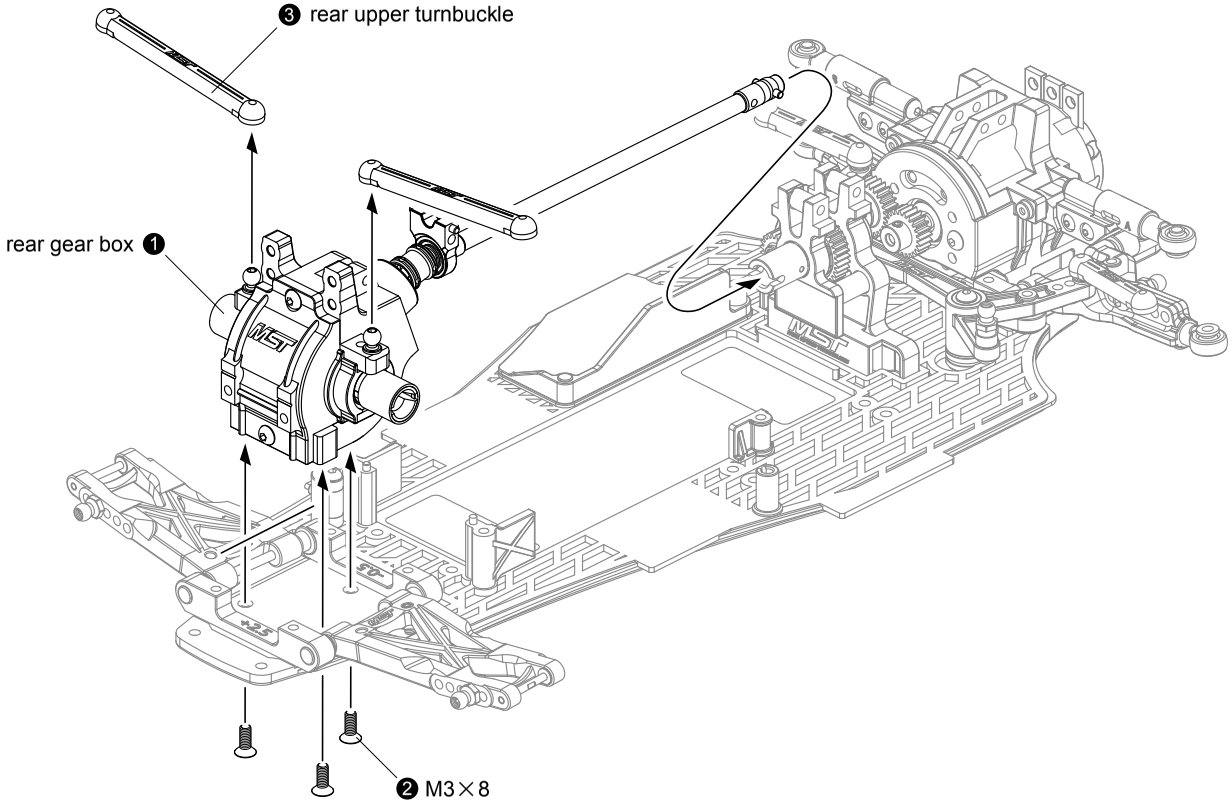

M2×5 screw ×4
圓頭螺絲

M3×6 screw ×10
圓頭螺絲

M2×8 screw ×1
圓頭螺絲

3×6 screw ×4
自攻圓頭螺絲

Gyro mount ×1
陀螺儀座

Battery presser ×1
電池壓塊

upper deck A ×1
二樓板 A

upper deck B ×1
二樓板 B

OPTIONAL PARTS

210390
FXX Carbon upper deck 2.5
FXX 碳纖維二樓板 2.5

STEP 1 Attaching upper deck
安裝二樓板

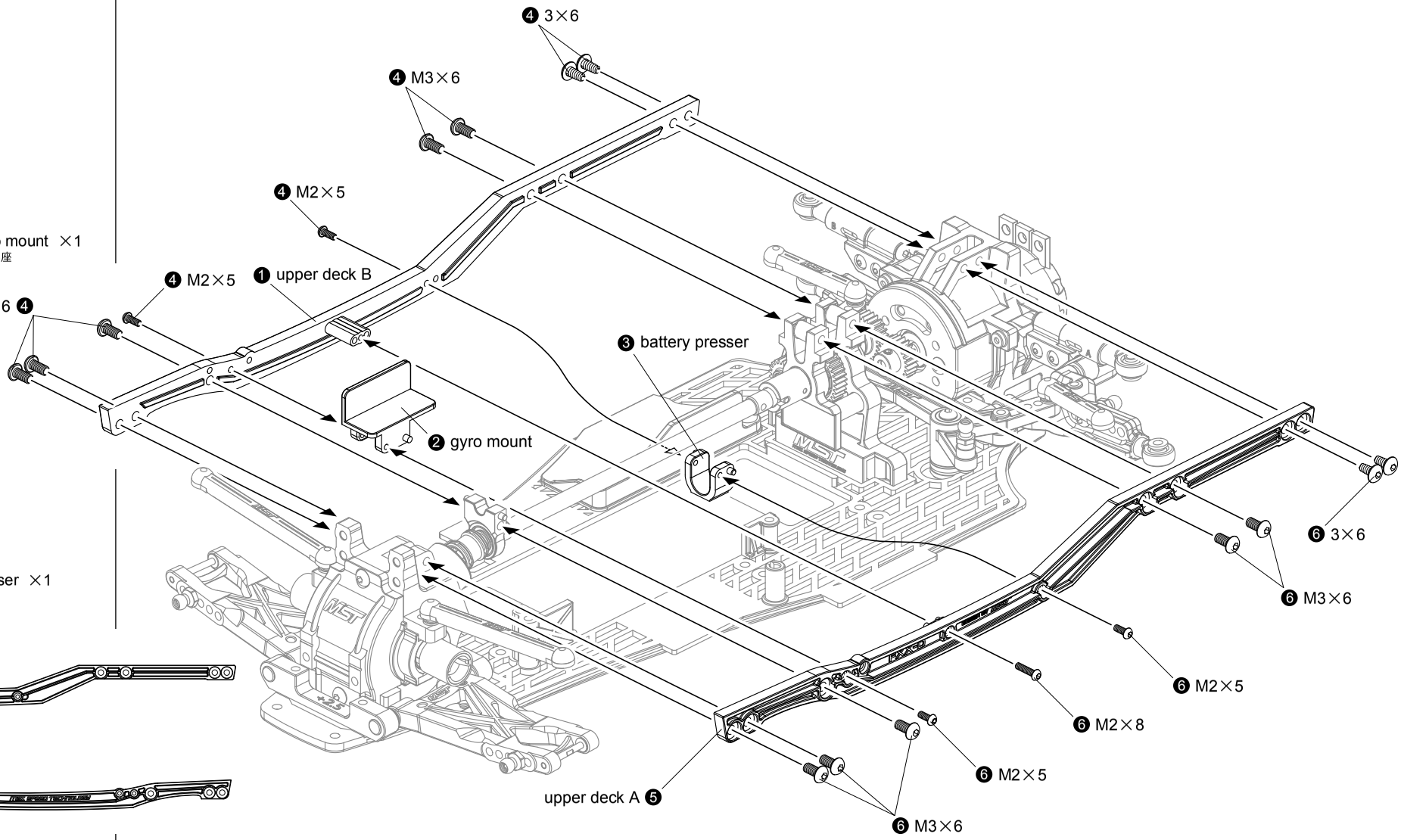

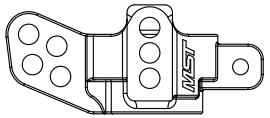

KPI upright A ×1
KPI 輪座 A

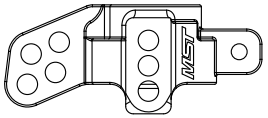

KPI upright B ×1
KPI 輪座 B

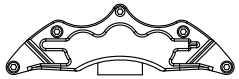

Brake calipers ×2
煞車卡鉗

Brake calipers mount ×2
卡鉗座

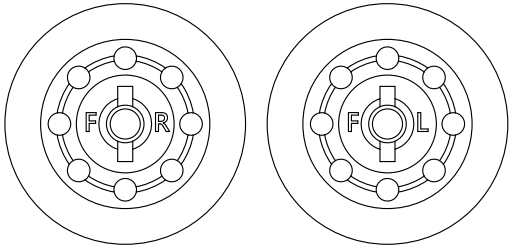

Wheel hubs（brake disc shaped）×2
六角輪座（煞車碟型）

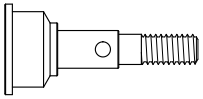

2WD Axle ×2
二驅輪軸

5×11 ball bearing ×2
培林

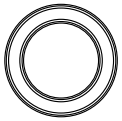

10×15 ball bearing ×2
培林

4.8×4.5 copper ball connector ×2
銅製球頭螺絲

M2×4 screw ×2
圓頭螺絲

2×9.8 pin ×2
插銷

M2.5×6 screw ×2
圓頭螺絲

M3×11 screw ×4
十字扁頭螺絲

STEP 1 Front axle assembly
前輪座組裝

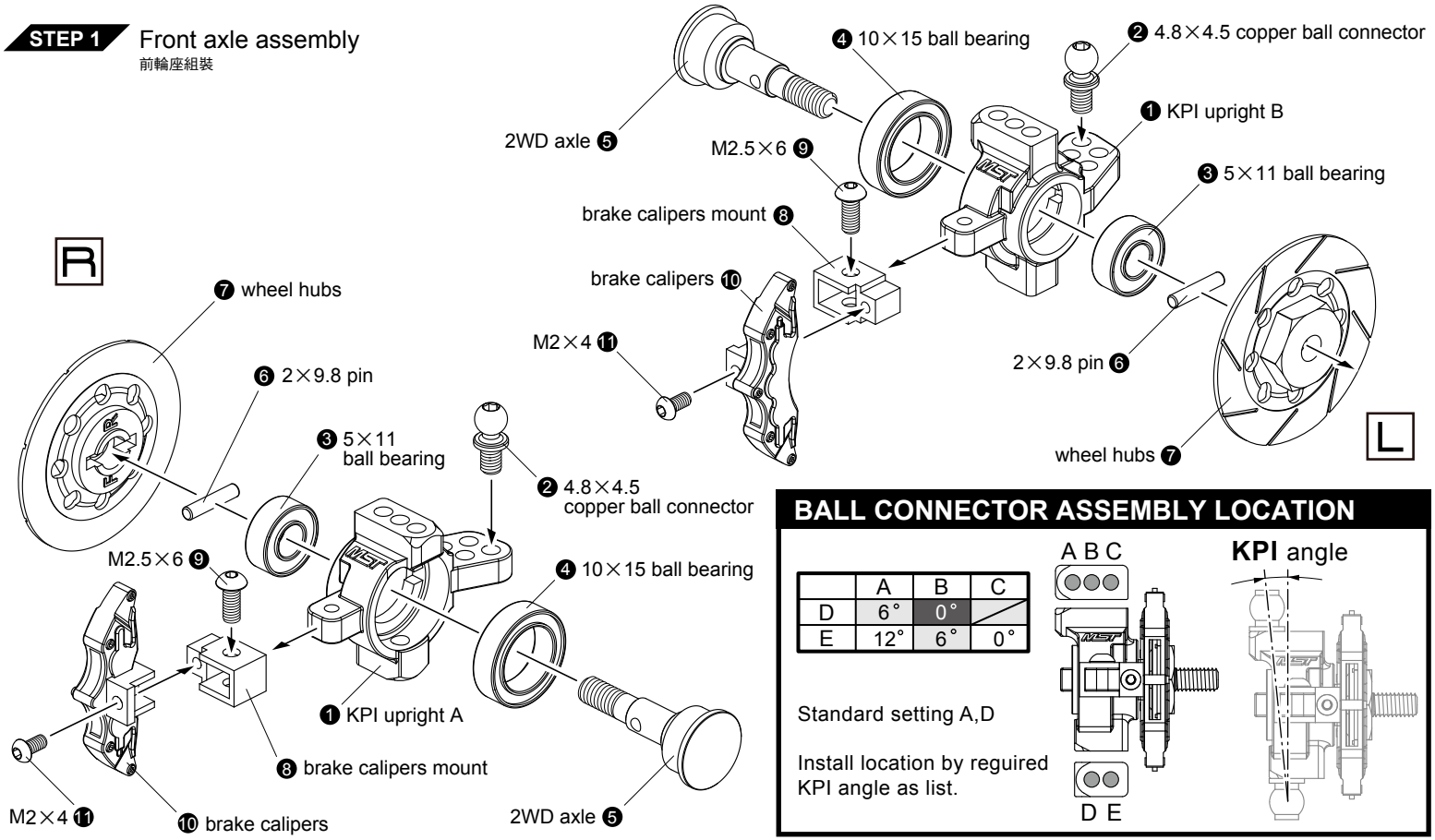

BALL CONNECTOR ASSEMBLY LOCATION

	A	B	C
D	6°	0°	
E	12°	6°	0°

Standard setting A,D

Install location by reguired KPI angle as list.

STEP 2 Attaching front axle
安裝前輪座

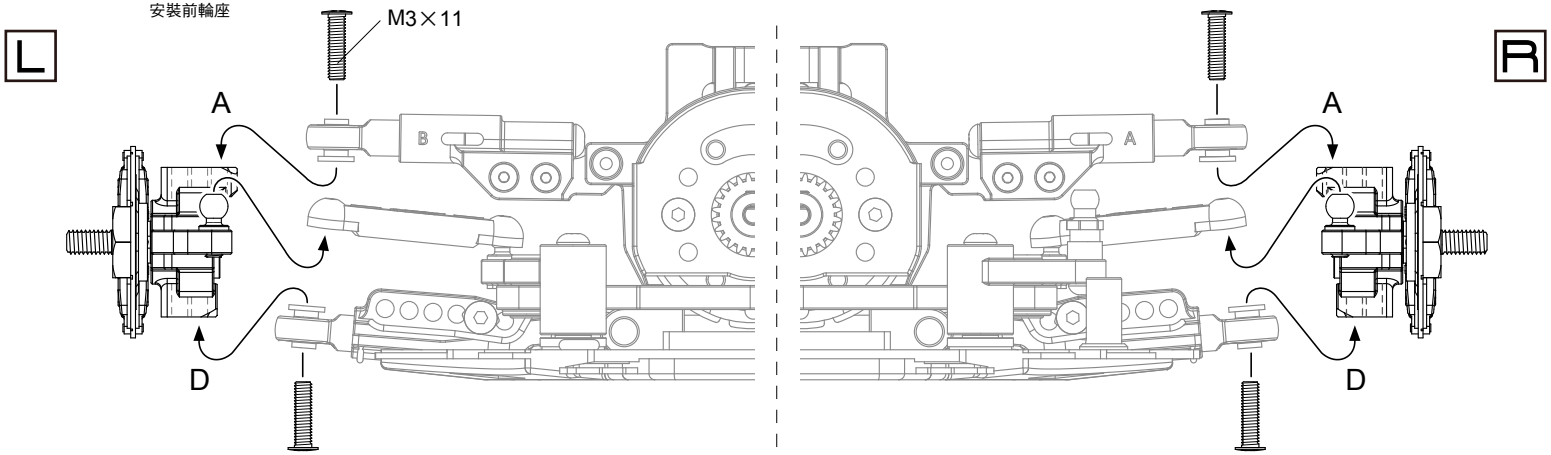

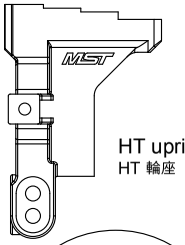

HT upright ×2
HT 輪座

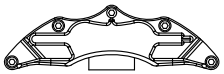

Brake calipers ×2
煞車卡鉗

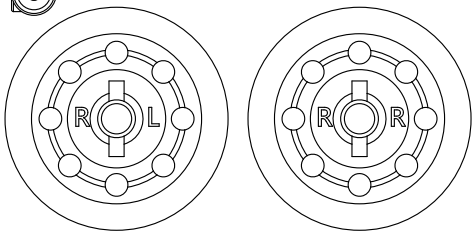

Wheel hubs (brake disc shaped) ×2
六角輪座（煞車碟型）

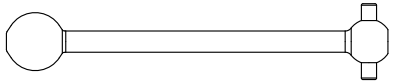

Steel CVA universal shaft 44 ×2
鋼製 CVA 傳動軸 44

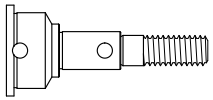

Wheel axle ×2
萬向接杯

5×11 ball bearing ×2
5×11 培林

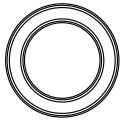

10×15 ball bearing ×2
10×15 培林

M2.5×2.5 screw ×2
止付螺絲

M2×4 screw ×2
圓頭螺絲

4.8×4.5 copper ball connector ×2
銅製球頭螺絲

2×9.8 shaft ×4
插銷

2×22 shaft ×2
插銷

STEP 1 Rear axle assembly
後輪座組裝

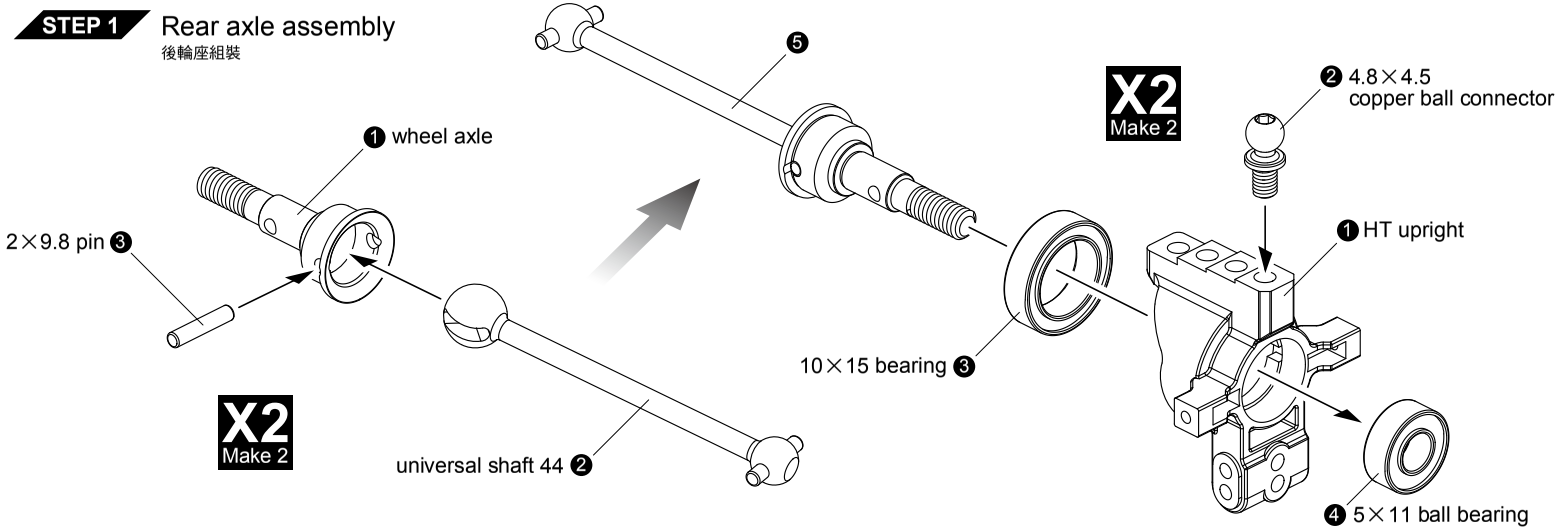

STEP 3 Attaching rear axle
安裝後輪座

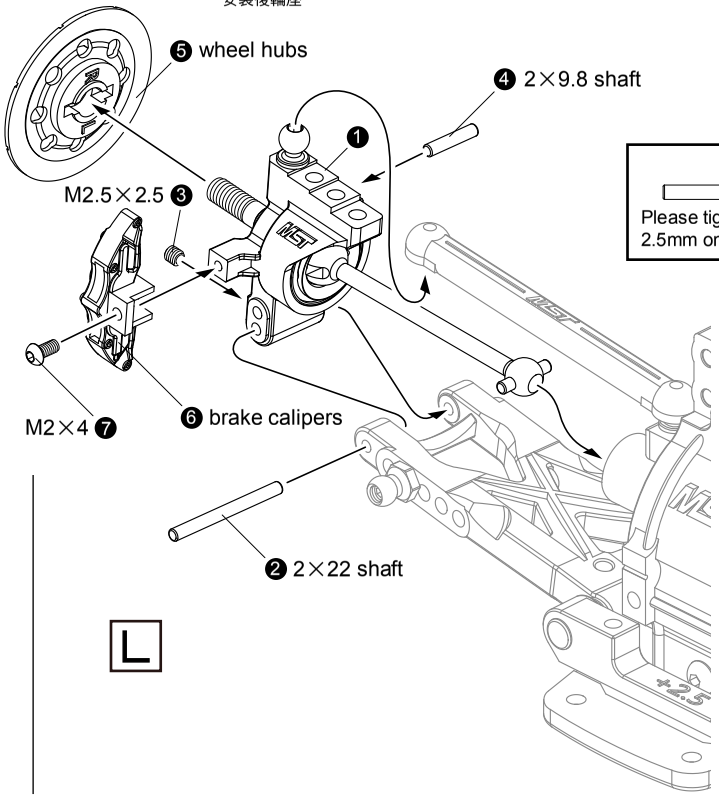

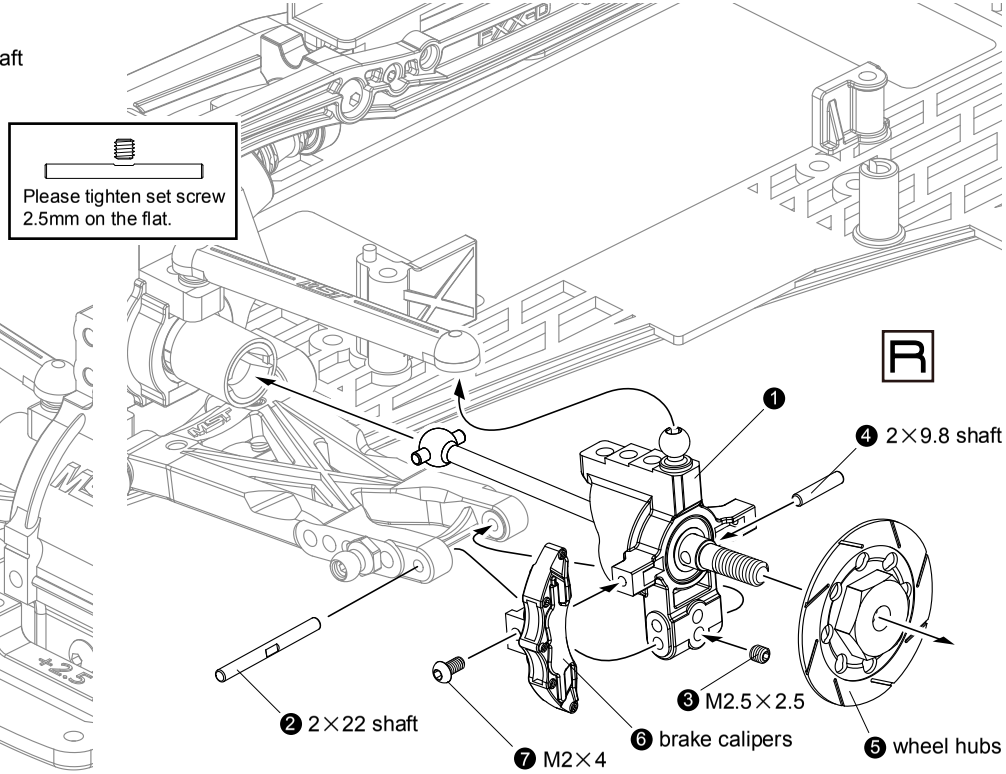

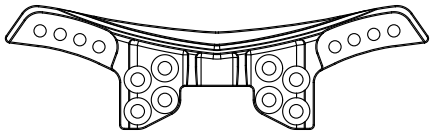

Front damper stay ×1
前避震架

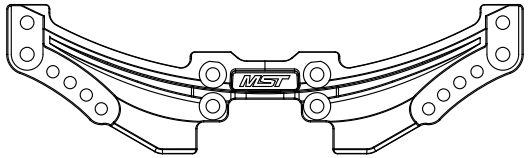

Rear damper stay ×1
後避震架

M3×8 screw ×4
圓頭螺絲

M3×8 screw ×2
止付螺絲

M3×10 screw ×2
止付螺絲

3×8 screw ×4
自攻螺絲

4.8 Copper hex ball ×4
4.8 銅製外六角球頭

3×5.5×2 spacer ×2
墊片

OPTIONAL PARTS

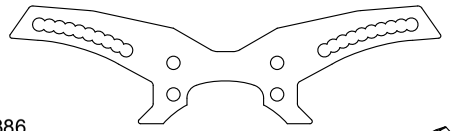

210386
FXX Carbon front damper stay 3.5
FXX 碳纖維前避震架 3.5

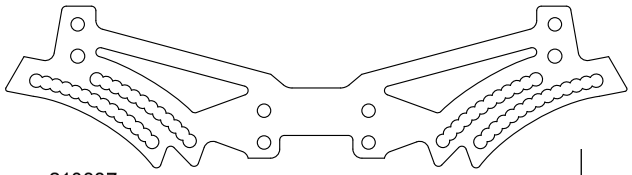

210387
FXX Carbon rear damper stay 3.5
FXX 碳纖維後避震架 3.5

STEP 1 Attaching front damper stay
安裝前避震架

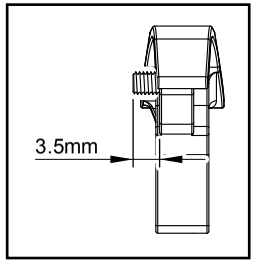

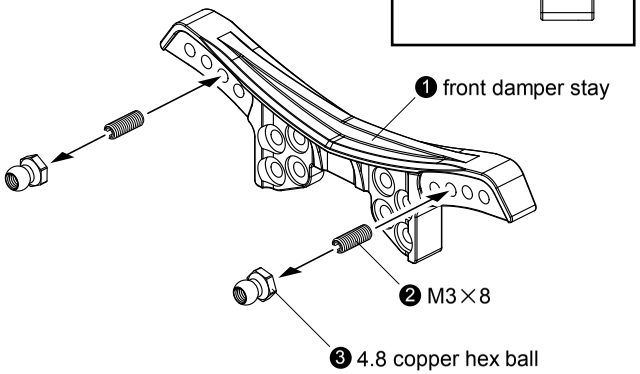

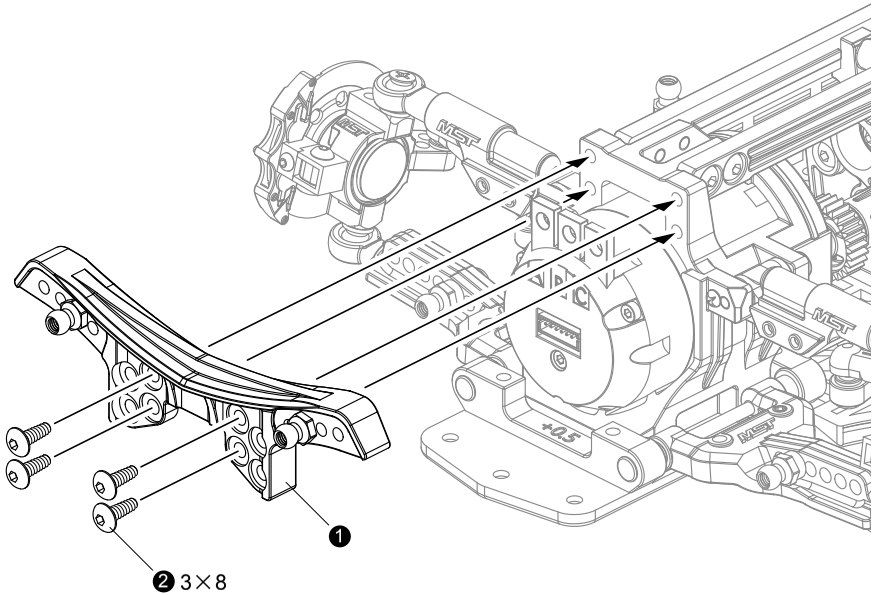

STEP 2 Attaching rear damper stay
安裝後避震架

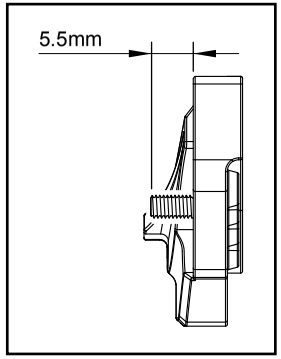

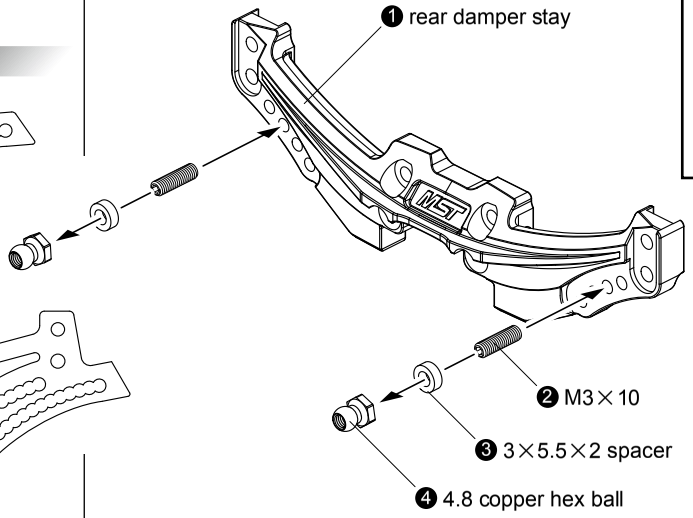

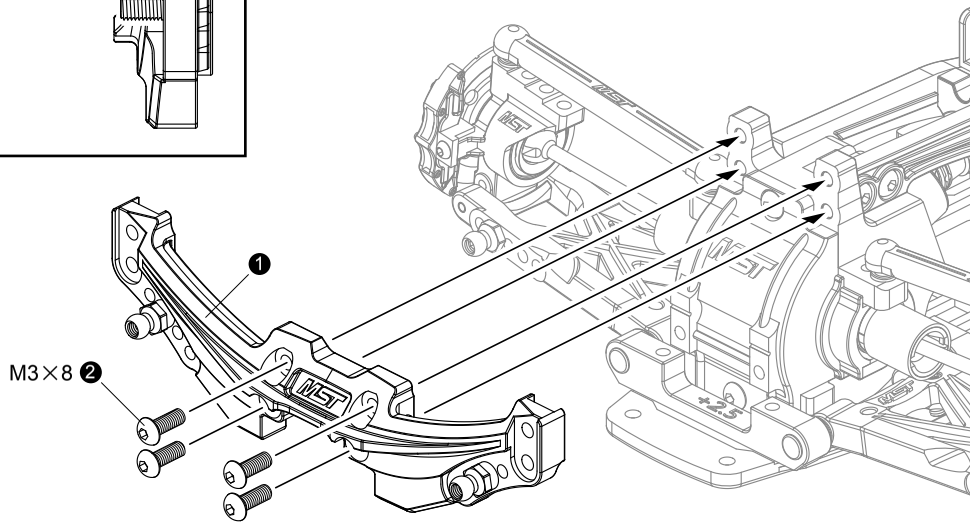

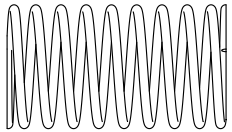
Coil spring 29mm ×2 (silver)
避震彈簧 29mm (銀)

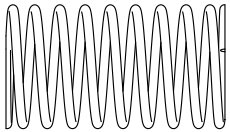
Soft coil spring 29mm ×2 (red)
軟避震彈簧 29mm (紅)

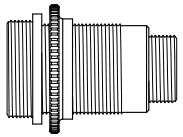
Damper cylinder ×4
避震筒身

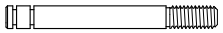
Piston rod ×4
避震軸心


Piston ×4
避震活塞

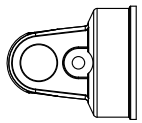
Cylinder cap ×4
避震器上蓋

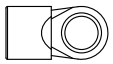
Damper adjuster ×4
避震器拉桿

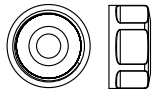
Rod guide cap ×4
避震器下蓋

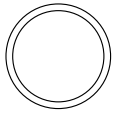
10.8×0.9 O-ring ×4
O環

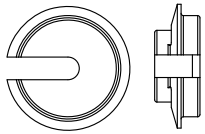
Damper retainer ×4
避震器彈簧座


Damper O-ring P3 ×4
避震器O環

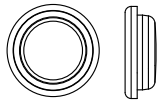
Oil seal ×4
避震器氣室


E-clip ×10
E形扣

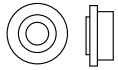
Rod guide ×4
避震器下蓋墊片


M3×5 screw ×4
沉頭螺絲

STEP 1 Damper assembly
避震器組裝

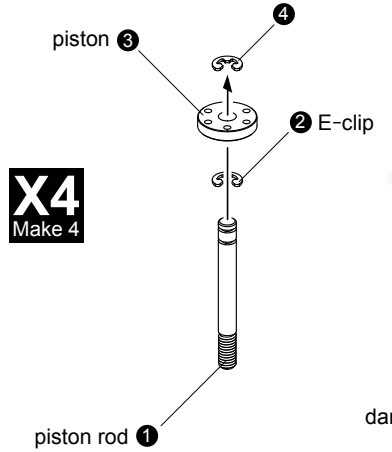

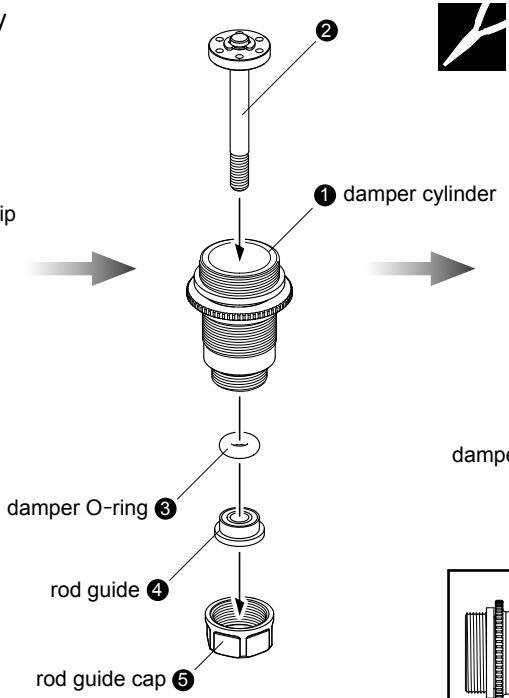

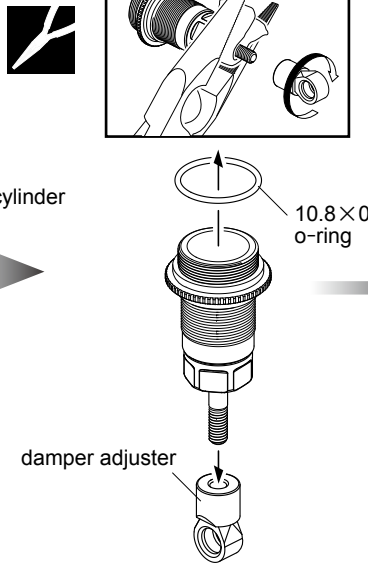

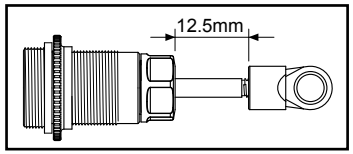

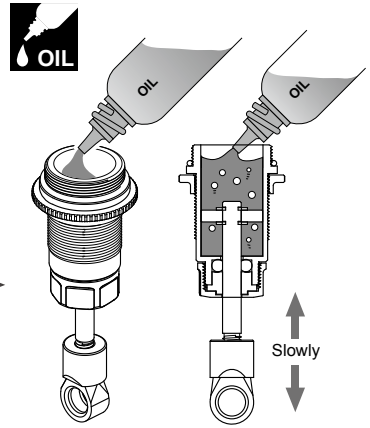

Pull down piston and pour oil into cylinder. Remove air bubbles by slowly moving piston up and down.
拉下活塞並填入矽油，緩慢上下移動活塞將氣泡移除。

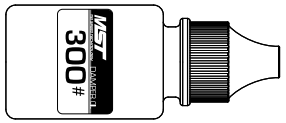

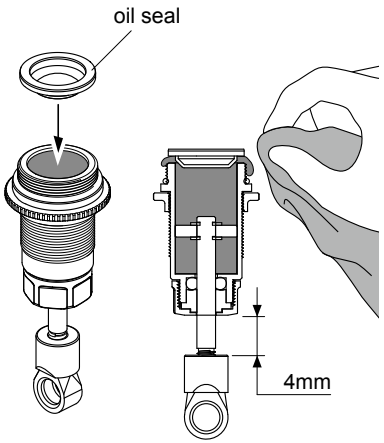

Pull down piston rod 4mm, attach oil seal and absorb oil overflow with tissue paper.
將軸心下拉4mm後，蓋上氣室並以面紙拭去溢出的矽油。

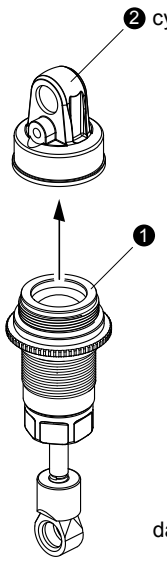

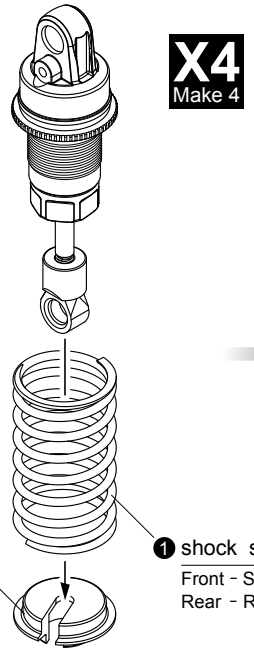

STEP 2 Attaching front damper
安裝前避震器

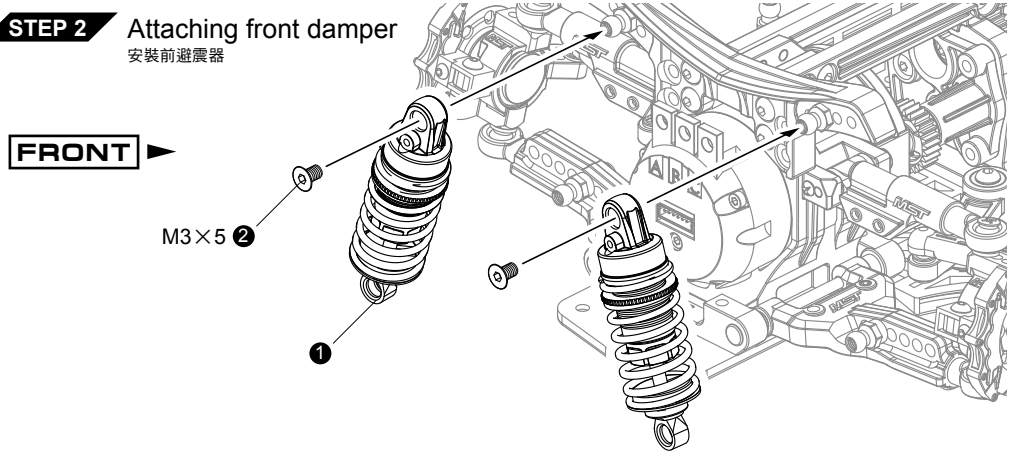

STEP 3 Attaching rear damper
安裝後避震器

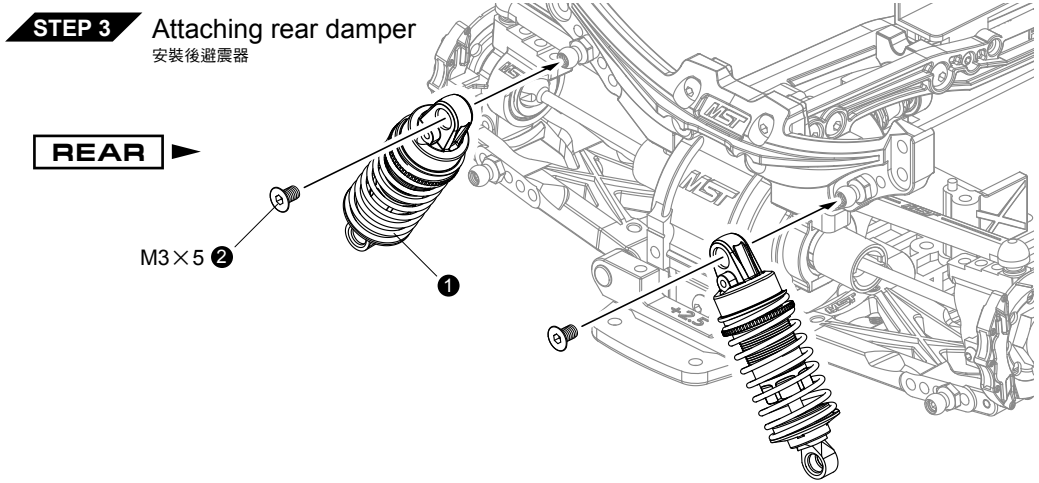

PARTS BAG 16 ◄ BUMPER & BODY MOUNTS
防撞泡棉 & 車殼固定座

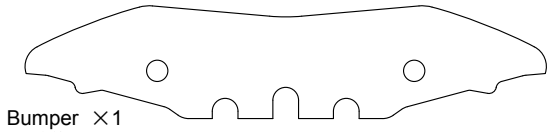

Bumper ×1
防撞泡棉

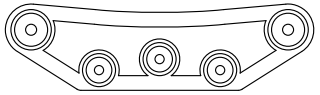

Bumper mount ×1
防撞板下座

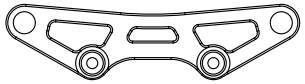

Bumper support ×1
防撞板上座

Body mount ×2
前車殼支柱

Body mount ×2
後車殼支柱

Body support ×4
浮動架

2×11.8 shaft ×4
插銷

M3×8 screw ×4
圓頭螺絲

R-clip ×2
R形扣

M3×8 screw ×5
沉頭螺絲

OPTIONAL PARTS

210361
Carbon bumper support 2.5
碳纖維泡棉壓板 2.5

STEP 1 Bumper assembly
前防撞板組裝

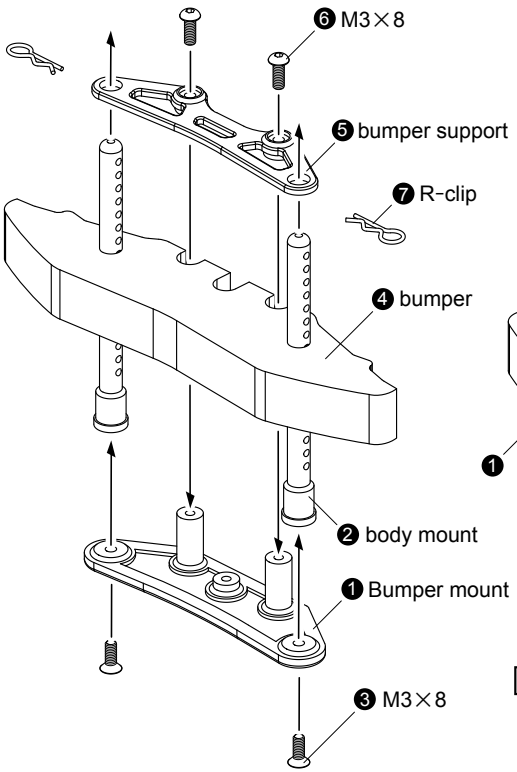

STEP 2 Attaching body mounts
安裝車殼固定座

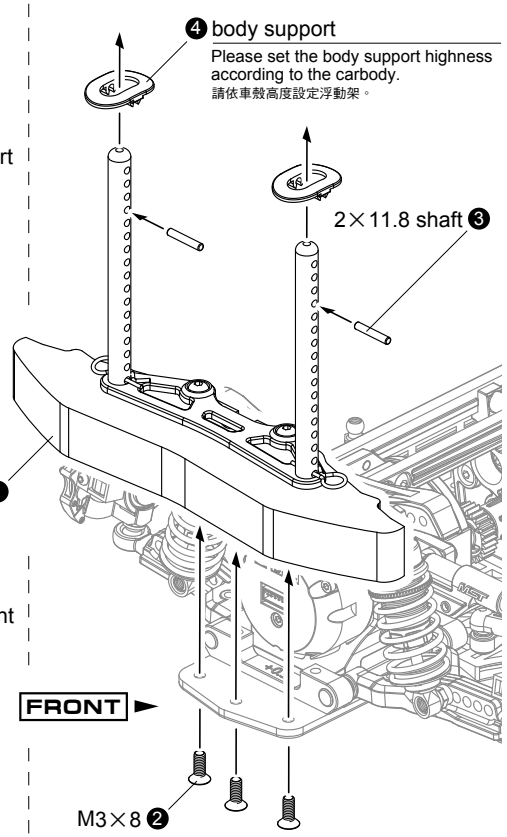

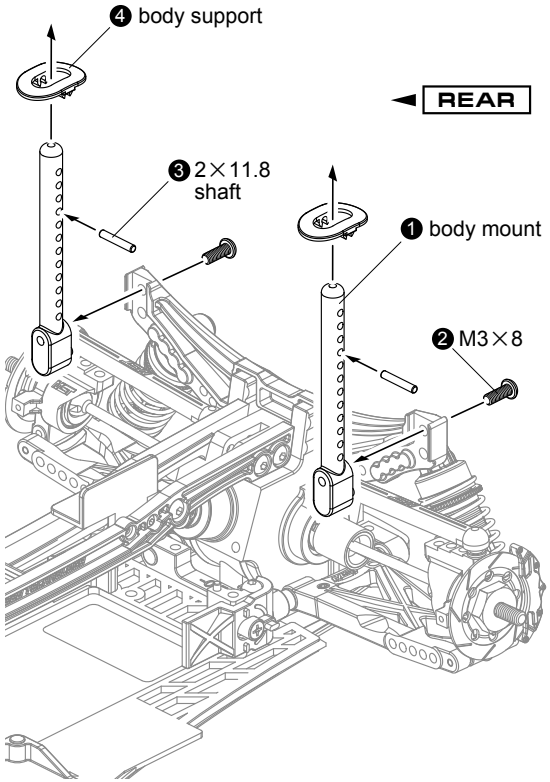

STEERING SERVO, ESC, GYRO & RECEIVER
轉向伺服, 電子變速器, 陀螺儀 & 接收機

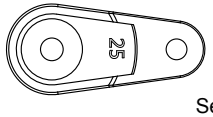

Servo horn 25T ×1
25T 伺服機片

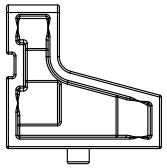

Servo mount set ×2
伺服機座

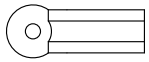

4.8 adjuster ×2
4.8 拉桿頭

4.8 Copper hex ball ×1
4.8 銅製外六角球頭

3×5.8×3 spacer ×1
墊片

3×6×0.5 spacer ×4
墊片

3×8×0.5 spacer ×1
墊片

M3×6 screw ×1
圓頭螺絲

M3×8 screw ×4
圓頭螺絲

M3×12 screw ×1
圓頭螺絲

M3×8 screw ×2
沉頭螺絲

M3×25 screw ×1
止付螺絲

STEP 1 Steering servo assembly
轉向伺服機組裝

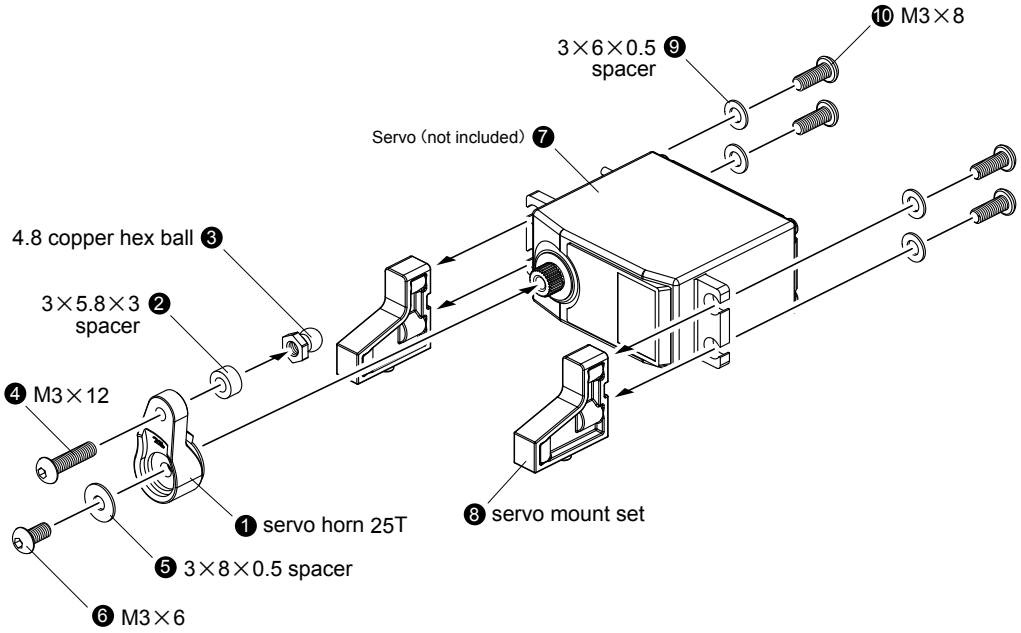

STEP 2 Attaching steering servo
安裝轉向伺服機

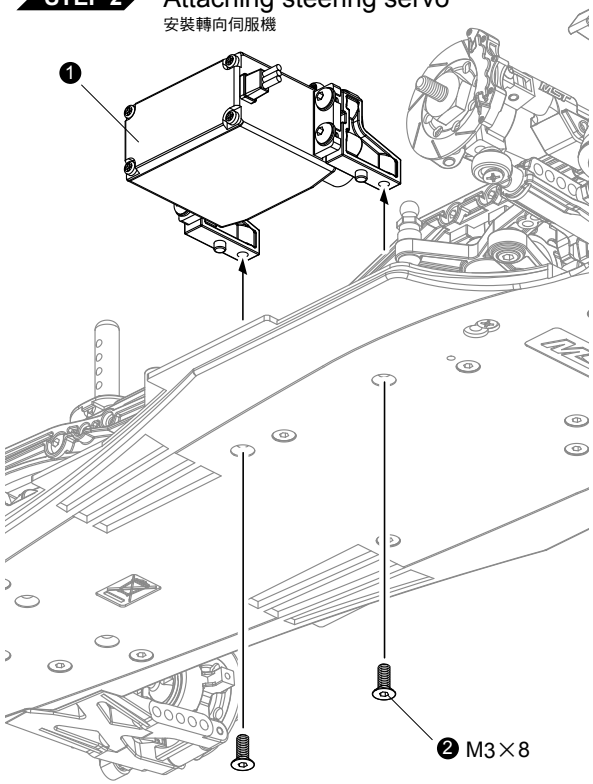

STEP 3 Servo saver turnbuckle assembly
伺服拉桿組裝

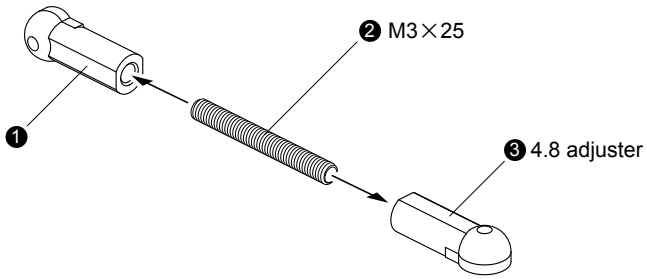

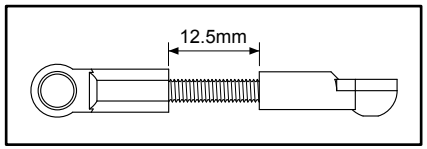

STEP 4 Attaching servo saver turnbuckle
安裝伺服拉桿

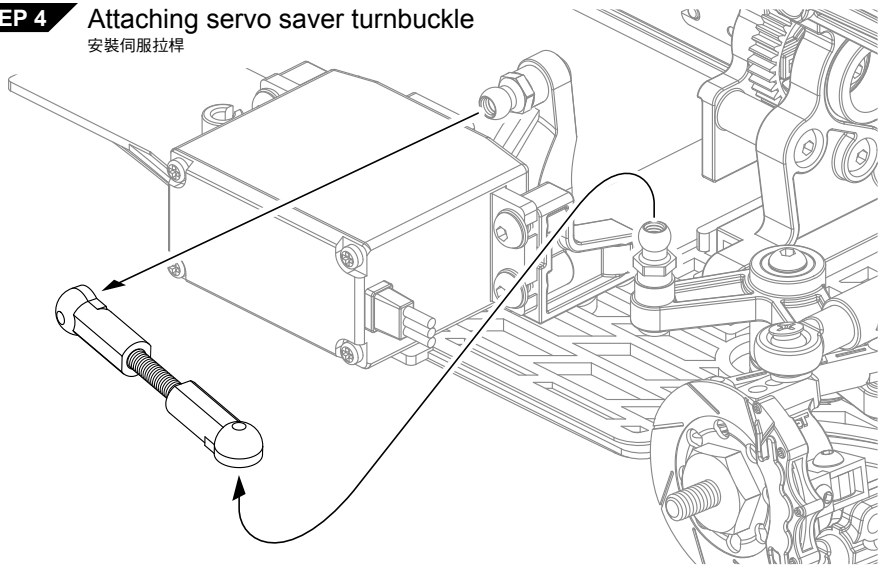

STEP 5 Attaching ESC
安裝電子變速器

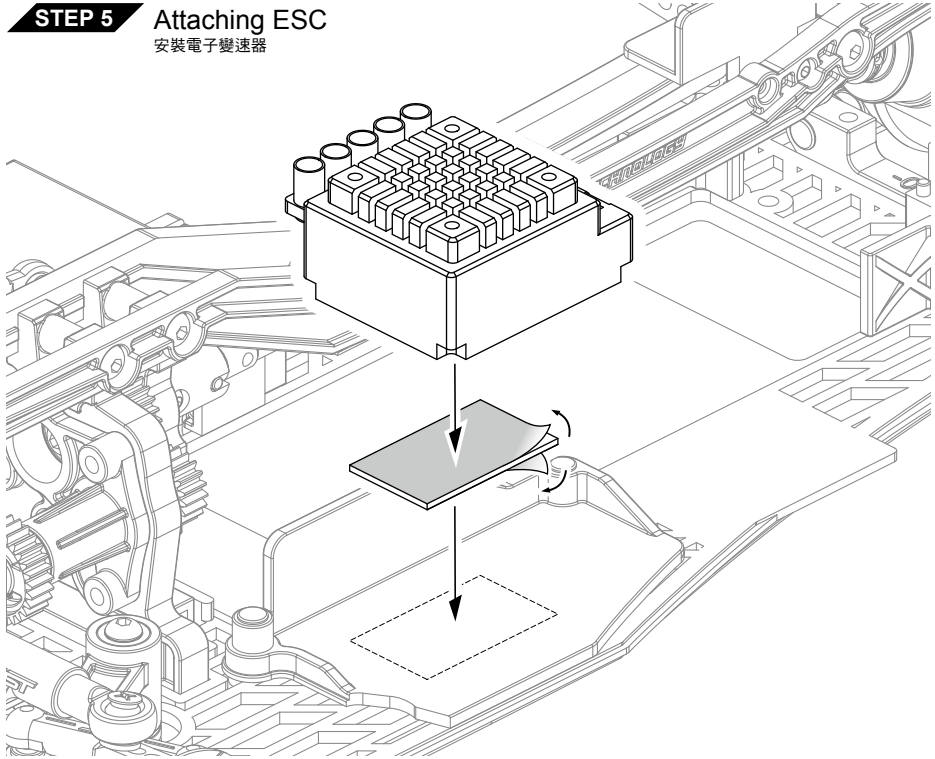

STEP 6 Attaching Gyro
安裝陀螺儀

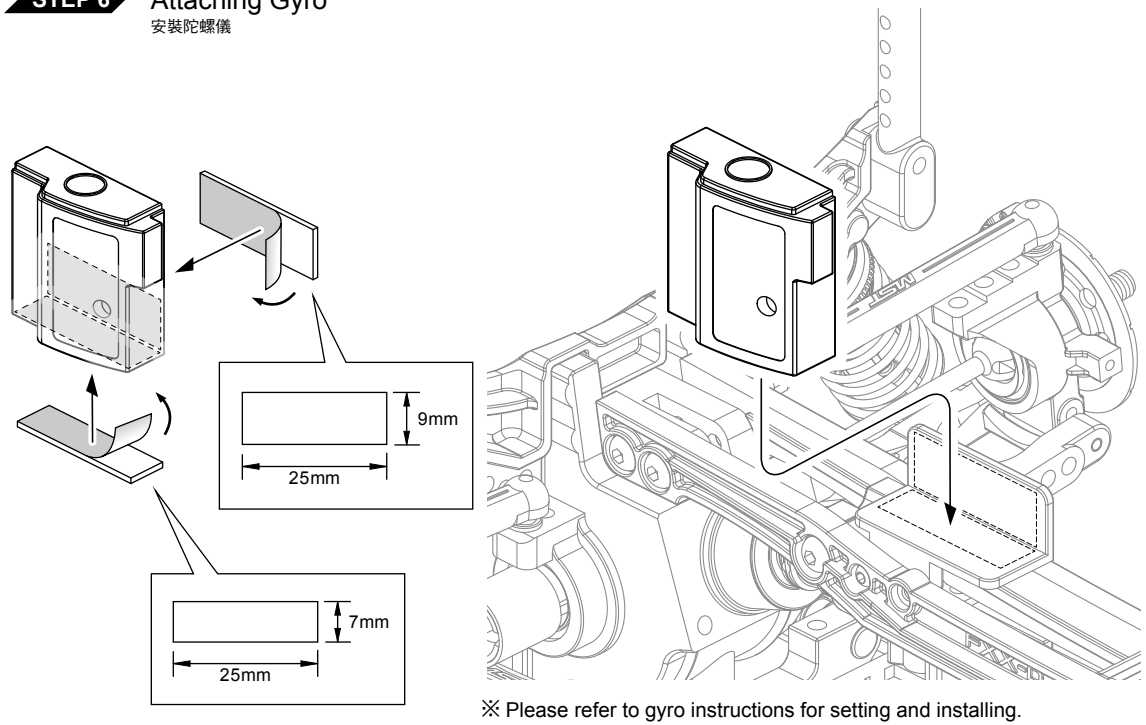

※ Please refer to gyro instructions for setting and installing.
陀螺儀的設定及組裝，請詳閱內附說明書。

STEP 7 Attaching receiver
安裝接收機

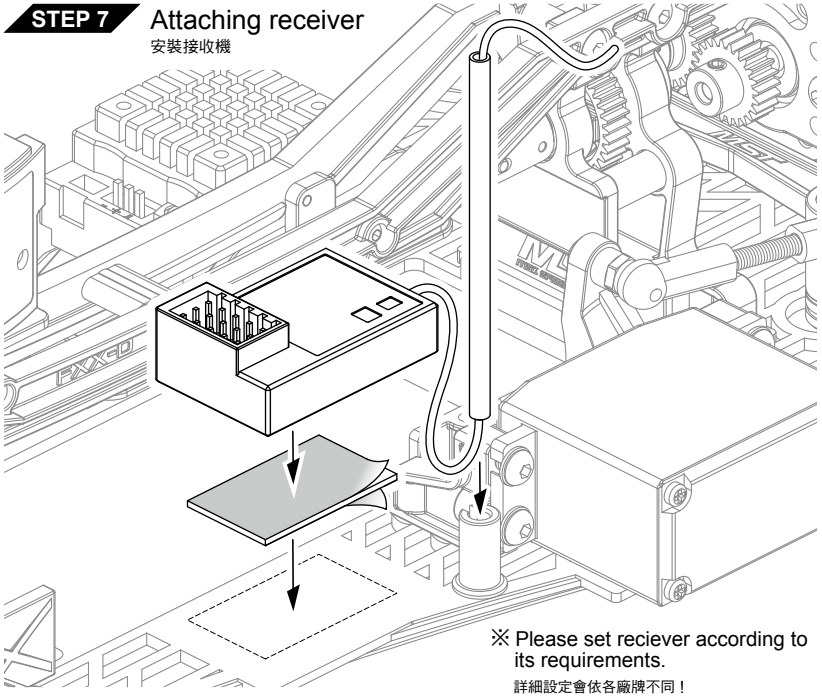

※ Please set reciever according to its requirements.
詳細設定會依各廠牌不同！

STEP 8 Attaching battery
安裝電池

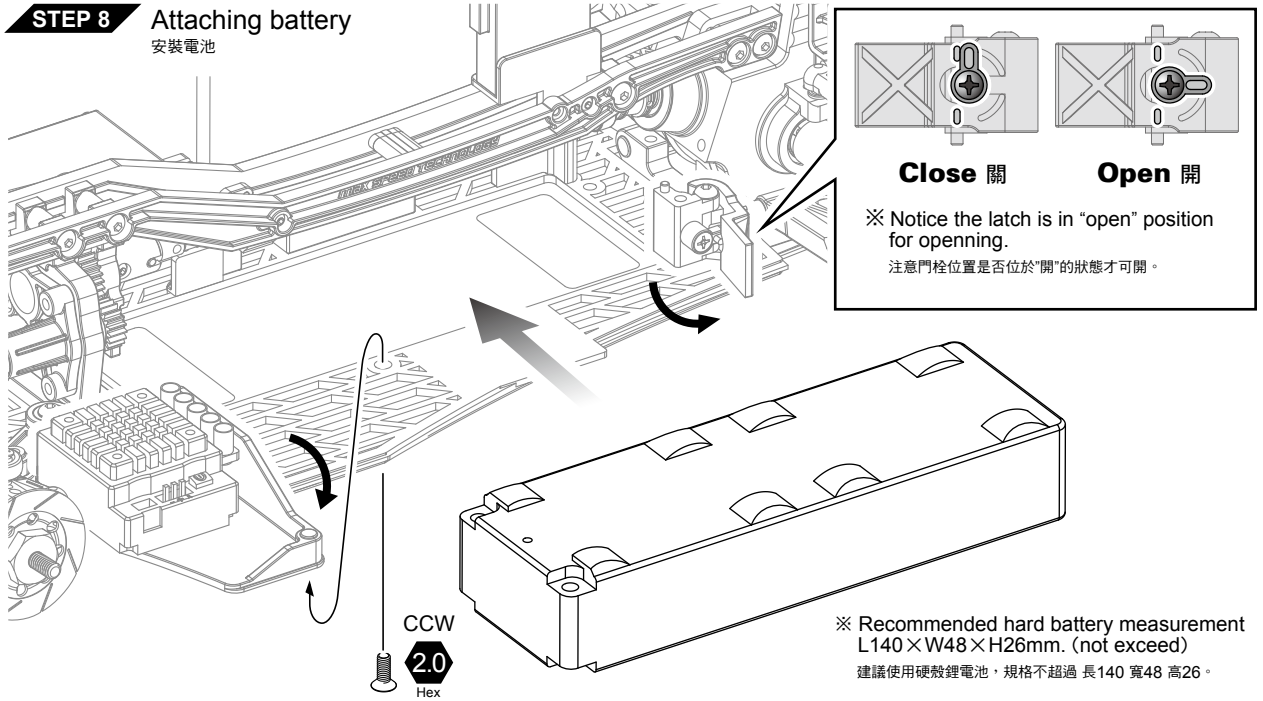

※ Notice the latch is in “open” position for openning.
注意門栓位置是否位於"開"的狀態才可開。

※ Recommended hard battery measurement L140×W48×H26mm. (not exceed)
建議使用硬殼鋰電池，規格不超過 長140 寬48 高26。

CS-R Tire ×4
CS-R 甩尾胎

M4 flange nut ×4
M4 凸緣螺帽

※ Please make the object as the standard.
請以實物為主。

OPTIONAL PARTS

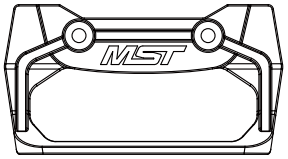

210379
Rear bumper
後防撞板

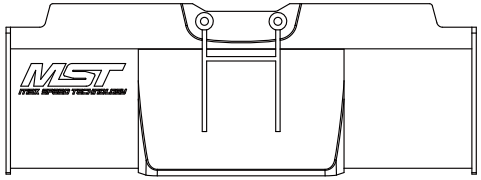

210282
MST diffuser
MST 後擾流板

STEP 1 Attaching front wheels
安裝前輪

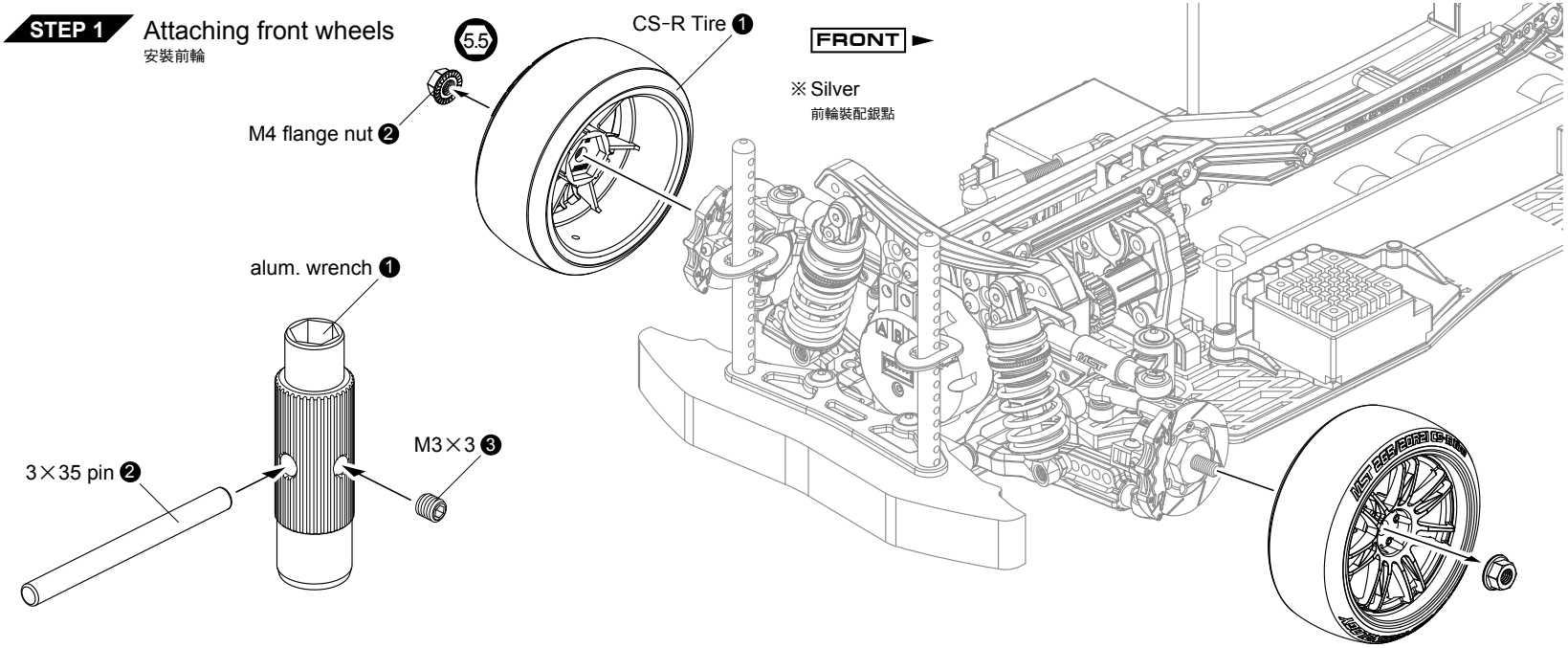

STEP 2 Attaching rear wheels
安裝後輪

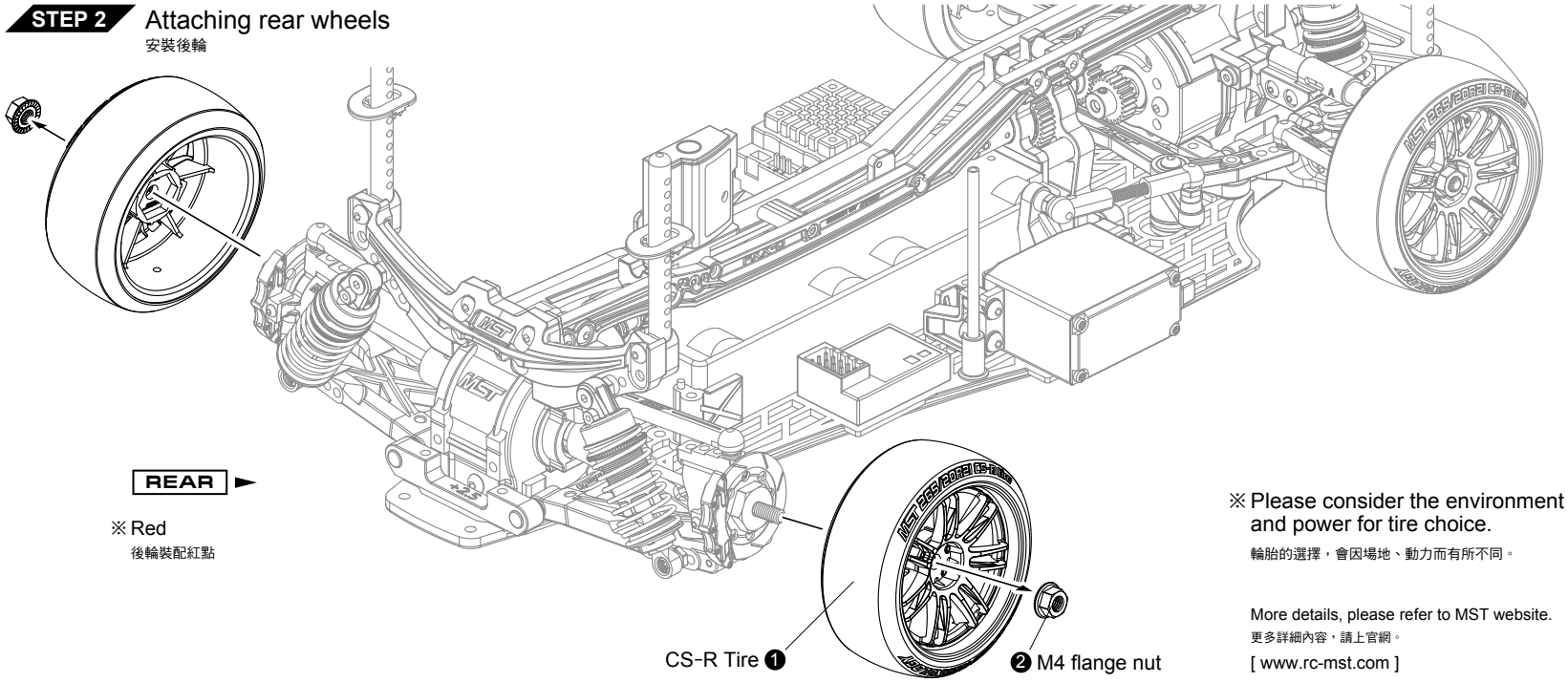

※ Please consider the environment and power for tire choice.
輪胎的選擇，會因場地、動力而有所不同。

More details, please refer to MST website.
更多詳細內容，請上官網。
[www.rc-mst.com]

FXX-D S

1 / 10 DRIFT CHASSIS

SETUP SHEET
ORIGINAL SETTING

DATE : _____ SURFACE : _____ NOTE : _____

TRACK : _____ GRIP : _____

Caster
■ 8°
□ 12°
□ 16°

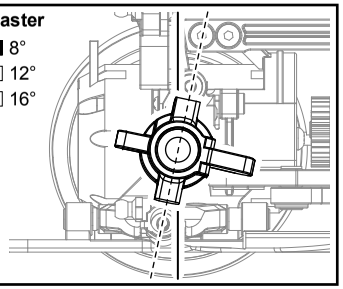

Front wheel hubs
0 mm

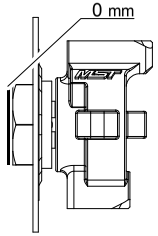

Battery position options

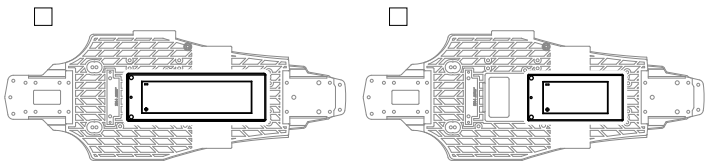

Rear wheel hubs
0 mm

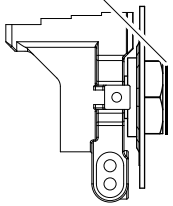

FRONT / REAR

Tire: _____ Tire: _____

Wheel: _____ Wheel: _____

Offset: _____ Offset: _____

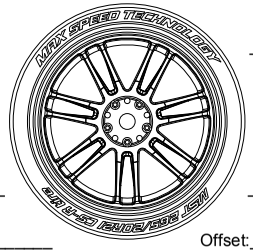

Front damper stay

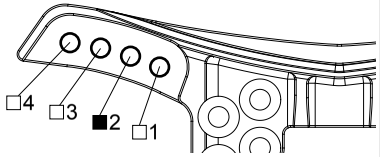

Front upright

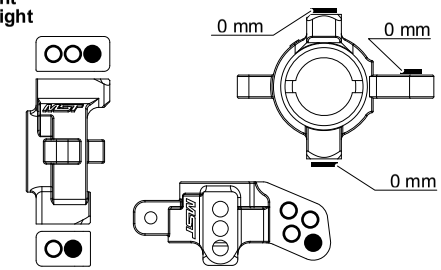

Rear upright

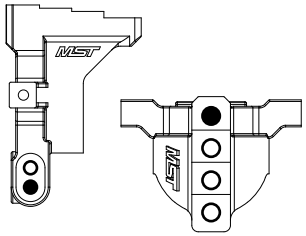

Rear damper stay

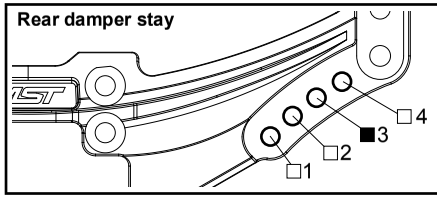

Rear diff

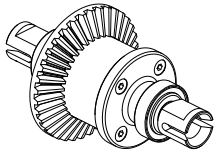

□ Gear diff
Diff oil_____

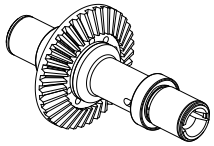

■ Spool

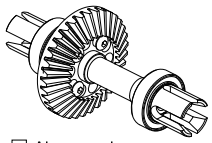

□ Alum spool

Camber: 4°
Toe-in: 0°

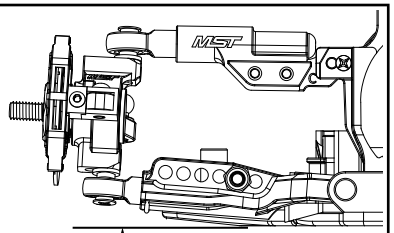

Ride height: 5 mm GROUND

mm
Camber: 5°
Toe-in: -3°

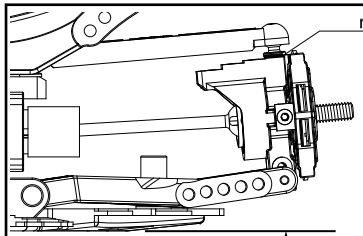

GROUND Ride height: 6 mm

Front rollcenter

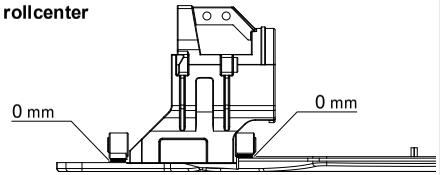

Suspension mount

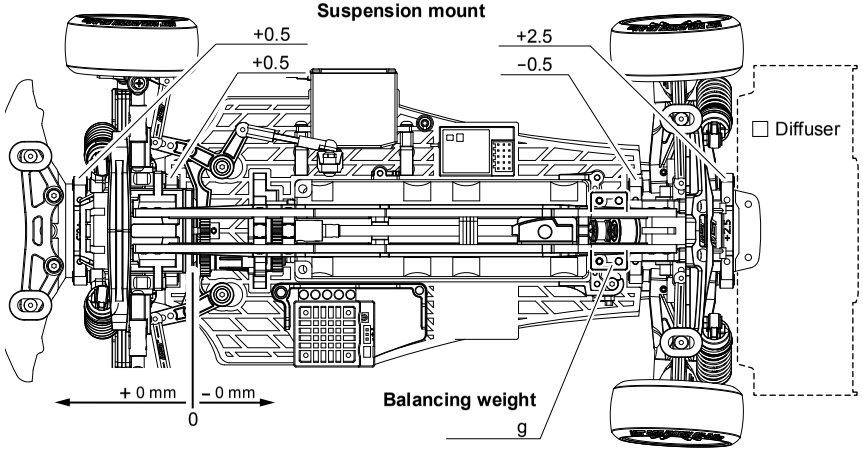

Motor Position: 0 mm

Rear rollcenter

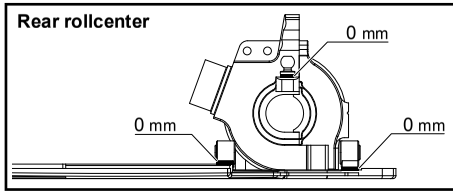

Front lower arm
□1 □2 □3 □4 ■5 □6

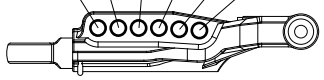

Rear lower arm

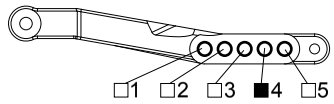

Ballast:

_____
_____
_____
_____
_____
_____

Front damper

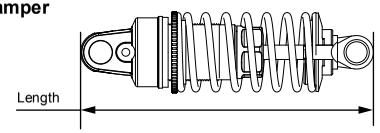

Shock oil: #300 Spring color: silver
Length: 63 mm Piston: Ø1.2 mm
Spring: 29 mm Ø1.4 Piston hole: 3

Rear damper

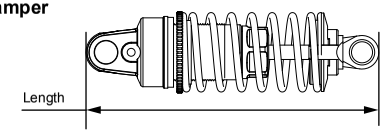

Shock oil: #300 Spring color: red
Length: 63 mm Piston: Ø1.2 mm
Spring: 29 mm Ø1.2 Piston hole: 3

Gear A × Gear C × Big Bevel Gear ÷ Gear B ÷ Small Bevel Gear ÷ Pinion Gear = Gear ratio

28T × 36T × 36 T ÷ 20T ÷ 17 T ÷ ____ T = _____

Motor & ESC: _____ **Battery:** _____

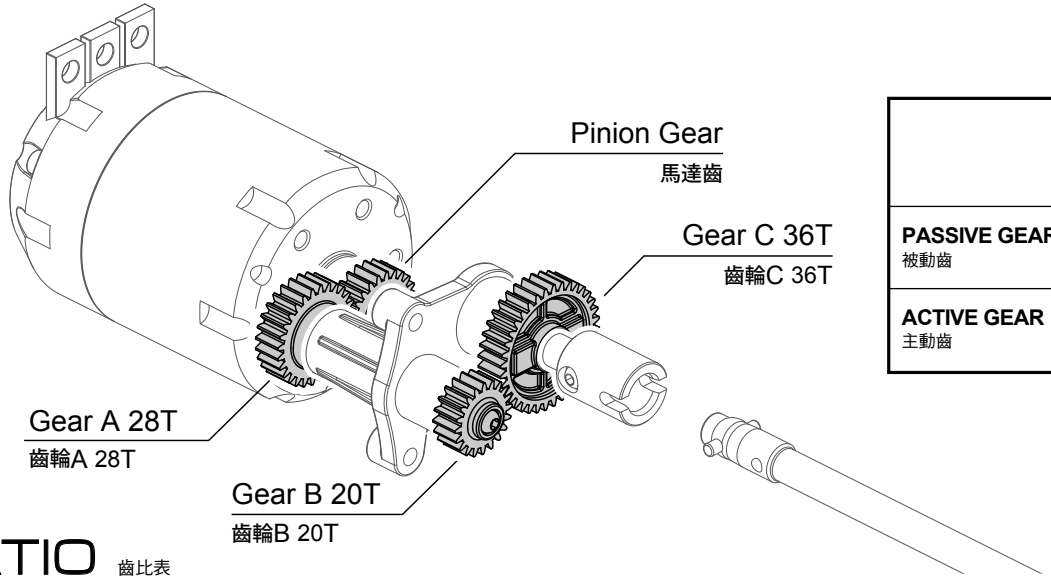

	1st Reduction Gear 1次減速齒	2nd Reduction Gear 2次減速齒	3rd Reduction Gear 3次減速齒
PASSIVE GEAR 被動齒	Gear A 齒輪A **28T**	Gear C 齒輪C **36T**	Big Bevel Gear 大傘齒 **36T**
ACTIVE GEAR 主動齒	Pinion Gear 馬達齒	Gear B 齒輪B **20T**	Small Bevel Gear 小傘齒 **17T**

＊Please set the gear ration according to motor specifications, envirements, and personal requirements.
齒比的選擇會因馬達規格、場地形態、車手手感，而有不同選擇。
可先參考當地配置後再選擇齒輪比！

GEAR RATIO 齒比表

For Gear A **28T**

	3rd Reduction rate. 3次減速比			
Pinion Gear 馬達齒	210362 32T/18T 1.78	210026 34T/18T 1.89	210034 36T/17T 2.12 Original setting	210025 40T/16T 2.50
18	4.98	5.29	5.93	7.00
19	4.72	5.01	5.62	6.63
20	4.48	4.76	5.34	6.30
21	4.27	4.53	5.08	6.00
22	4.07	4.33	4.85	5.73
23	3.90	4.14	4.64	5.48

For Gear A **30T** (210402)

	3rd Reduction rate. 3次減速比			
Pinion Gear 馬達齒	210362 32T/18T 1.78	210026 34T/18T 1.89	210034 36T/17T 2.12 Original setting	210025 40T/16T 2.50
16	6.00	6.37	7.15	8.44
17	5.64	6.00	6.73	7.94
18	5.33	5.67	6.35	7.50
19	5.05	5.37	6.02	7.11
20	4.80	5.10	5.72	6.75
21	4.57	4.86	5.45	6.43

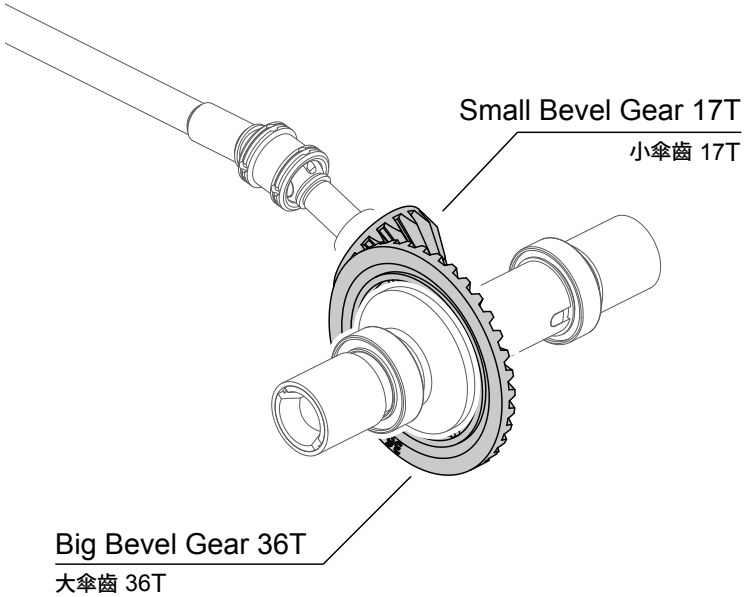

※ **FORMULA**
終傳比計算式

Gear A × Gear C × Big Bevel Gear ÷ Gear B ÷ Small Bevel Gear ÷ Pinion Gear = Transmission ratio

齒輪A × 齒輪C × 大傘齒 ÷ 齒輪B ÷ 小傘齒 ÷ 馬達齒 = 終傳比

FXX-D S

1/10 SCALE RC RWD HIGH PERFORMANCE DRIFT CAR

INSTRUCTION MANUAL

www.rc-mst.com

[facebook.com/MST.tw]

Max Speed Technology

PRINTED WITH SOY INK

026073